171505993/5 rev1 12/2019

MP1 504 Series
MP1 554 Series

IT **Tosaerba con conducente a piedi** - MANUALE DI ISTRUZIONI
ATTENZIONE: prima di usare la macchina, leggere attentamente il presente libretto.

BG **Косачка с изправен водач** - УПЪТВАНЕ ЗА УПОТРЕБА
ВНИМАНИЕ: преди да използвате машината прочетете внимателно настоящата книжка.

BS **Kosilica na guranje** - UPUTSTVO ZA UPOTREBU
PAŽNJA: prije nego što koristite ovu mašinu, pažljivo pročitajte priručnik s uputama.

CS **Sekačka se stojící obsluhou** - NÁVOD K POUŽITÍ
UPOZORNĚNÍ: před použitím stroje si pozorně přečtěte tento návod k použití.

DA **Plæneklipper betjent af gående personer** - BRUGSANVISNING
ADVARSEL: læs instruktionsbogen omhyggeligt igennem, før du tager denne maskine i brug.

DE **Handgeführter Rasenmäher** - GEBRAUCHSANWEISUNG
ACHTUNG: vor inbetriebnahme des geräts die gebrauchsanleitung aufmerksam lesen.

EL **Χλοοκοπτική μηχανή με όρθιο χειριστή** - ΟΔΗΓΙΕΣ ΧΡΗΣΠΣ
ΠΡΟΣΟΧΗ: πριν χρησιμοποιησετε το μηχανημα, διαβαστε προσεκτικα το παρον εγχειριδιο.

EN **Pedestrian controlled lawnmower** - OPERATOR'S MANUAL
WARNING: read thoroughly the instruction booklet before using the machine.

ES **Cortadora de pasto con operador de pie** - MANUAL DE INSTRUCCIONES
ATENCIÓN: antes de utilizar la máquina, leer atentamente el presente manual.

ET **Seisva juhiga muruniitja** - KASUTUSJUHEND
TÄHELEPANU: enne masina kasutamist lugeda tähelepanelikult antud kasutusjuhendit.

FI **Kävellen ohjattava ruohonleikkuri** - KÄYTTÖOHJEET
VAROITUS: lue käyttöopas huolellisesti ennen koneen käyttöä.

FR **Tondeuse à gazon à conducteur à pied** - MANUEL D'UTILISATION
ATTENTION: lire attentivement le manuel avant d'utiliser cette machine.

HR **Ručno upravljana kosilica trave** - PRIRUČNIK ZA UPORABU
POZOR: prije uporabe stroja, pažljivo pročitajte ovaj priručnik.

HU **Gyalogvezetésű fűnyírógép** - HASZNÁLATI UTASÍTÁS
FIGYELEM! a gép használata előtt olvassa el figyelmesen a jelen kézikönyvet.

LT **Pėsčio operatoriaus valdoma vejapjovė** - NAUDOJIMO INSTRUKCIJOS
DĖMESIO: prieš naudojant įrenginį, atidžiai perskaityti šį naudotojo vadovą.

LV **No aizmugures ejot vadāma zāliena pļaujmašīna**
LIETOŠANAS INSTRUKCIJA - **UZMANĪBU: pirms aparāta lietošanai rūpīgi izlasiet doto instrukciju.**

MK **Тревокосачка со оператор на нозе** - УПАТСТВА ЗА УПОТРЕБА
ВНИМАНИЕ: прочитајте го внимателно ова упатство пред да ја користите машината.

NL **Lopend bediende grasmaaier** - GEBRUIKERSHANDLEIDING
LET OP: vooraleer de machine te gebruiken, dient men deze handleiding aandachtig te lezen.

NO **Håndført gressklipper** - INSTRUKSJONSBOK
ADVARSEL: les denne bruksanvisningen nøye før du bruker maskinen.

PL **Kosiarka prowadzona przez operatora pieszego**
INSTRUKCJE OBSŁUGI - **OSTRZEŻENIE: przed użyciem maszyny, należy uważnie przeczytać niniejszą instrukcję.**

PT **Corta-relvas para operador apeado** - MANUAL DE INSTRUÇÕES
ATENÇÃO: antes de usar a máquina, leia atentamente o presente manual.

RO **Maşină de tuns iarba cu conducător pedestru**
MANUAL DE INSTRUCȚIUNI - **ATENȚIE: înainte de a utiliza maşina, citiți cu atenție manualul de față.**

RU **Газонокосилка с пешеходным управлением**
РУКОВОДСТВО ПО ЭКСПЛУАТАЦИИ - **ВНИМАНИЕ: прежде чем пользоваться оборудованием, внимательно прочтите зто руководство по зксплуатации.**

SK **Kosačka so stojacou obsluhou** - NÁVOD NA POUŽITIE
UPOZORNENIE: pred použitím stroja si pozorne prečítajte tento návod.

SL **Kosilnica za stoječega delavca** - PRIROČNIK ZA UPORABO
POZOR: preden uporabite stroj, pazljivo preberite priročnik z navodili.

SR **Kosačica na guranje** - PRIRUČNIK SA UPUTSTVIMA
PAŽNJA: pre korišćenja mašine pažljivo pročitati ovaj priručnik.

SV **Förarledd gräsklippare** - BRUKSANVISNING
VARNING: läs igenom hela detta häfte innan du använder maskinen.

TR **Ayak kumandalı çim biçme makinesi** - KULLANIM KILAVUZU
DİKKAT: makıneyı kullanmadan önce talımatlar ıçeren kilavuzu dıkkatle okuyun.

ITALIANO - **Istruzioni Originali** ..... IT
БЪЛГАРСКИ - Инструкция за експлоатация ..... BG
BOSANSKI - Prijevod originalnih uputa ..... BS
ČESKY - Překlad původního návodu k používání ..... CS
DANSK - Oversættelse af den originale brugsanvisning ..... DA
DEUTSCH - Übersetzung der Originalbetriebsanleitung ..... DE
ΕΛΛΗΝΙΚΑ - Μεταφραση των πρωτοτυπων οδηγιων ..... EL
ENGLISH - Translation of the original instruction ..... EN
ESPAÑOL - Traducción del Manual Original ..... ES
EESTI - Algupärase kasutusjuhendi tõlge ..... ET
SUOMI - Alkuperäisten ohjeiden käännös ..... FI
FRANÇAIS - Traduction de la notice originale ..... FR
HRVATSKI - Prijevod originalnih uputa ..... HR
MAGYAR - Eredeti használati utasítás fordítása ..... HU
LIETUVIŠKAI - Originalių instrukcijų vertimas ..... LT
LATVIEŠU - Instrukciju tulkojums no oriģināl valodas LV
МАКЕДОНСКИ - Превод на оригиналните упатства ..... MK
NEDERLANDS - Vertaling van de oorspronkelijke gebruiksaanwijzing ..... NL
NORSK - Oversettelse av den originale bruksanvisningen ..... NO
POLSKI - Tłumaczenie instrukcji oryginalnej ..... PL
PORTUGUÊS - Tradução do manual original ..... PT
ROMÂN - Traducerea manualului fabricantului ..... RO
РУССКИЙ - Перевод оригинальных инструкций ..... RU
SLOVENSKY - Preklad pôvodného návodu na použitie ..... SK
SLOVENŠČINA - Prevod izvirnih navodil ..... SL
SRPSKI - Prevod originalnih uputstva ..... SR
SVENSKA - Översättning av bruksanvisning i original ..... SV
TÜRKÇE - Orijinal Talimatların Tercümesi ..... TR

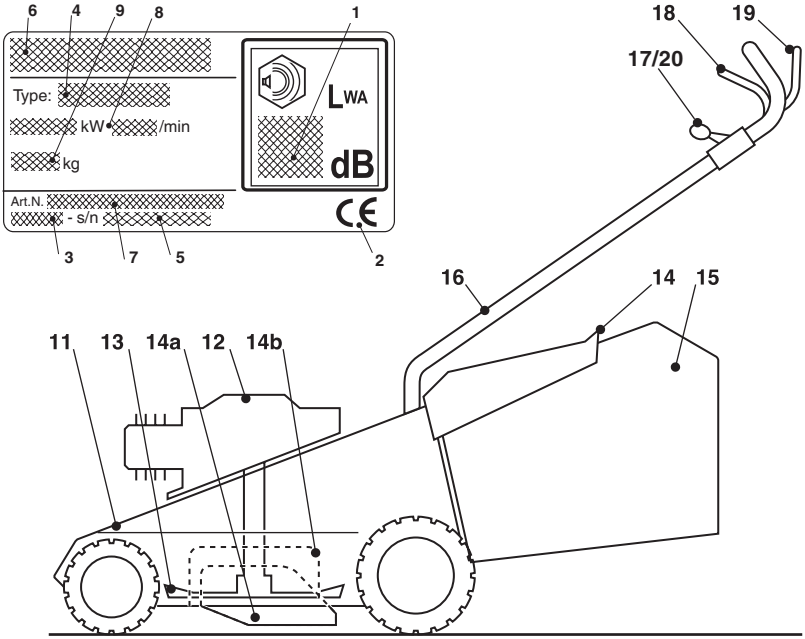

21 22 23

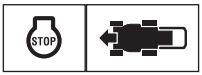

24 25

26 27

36

41

42

43

44

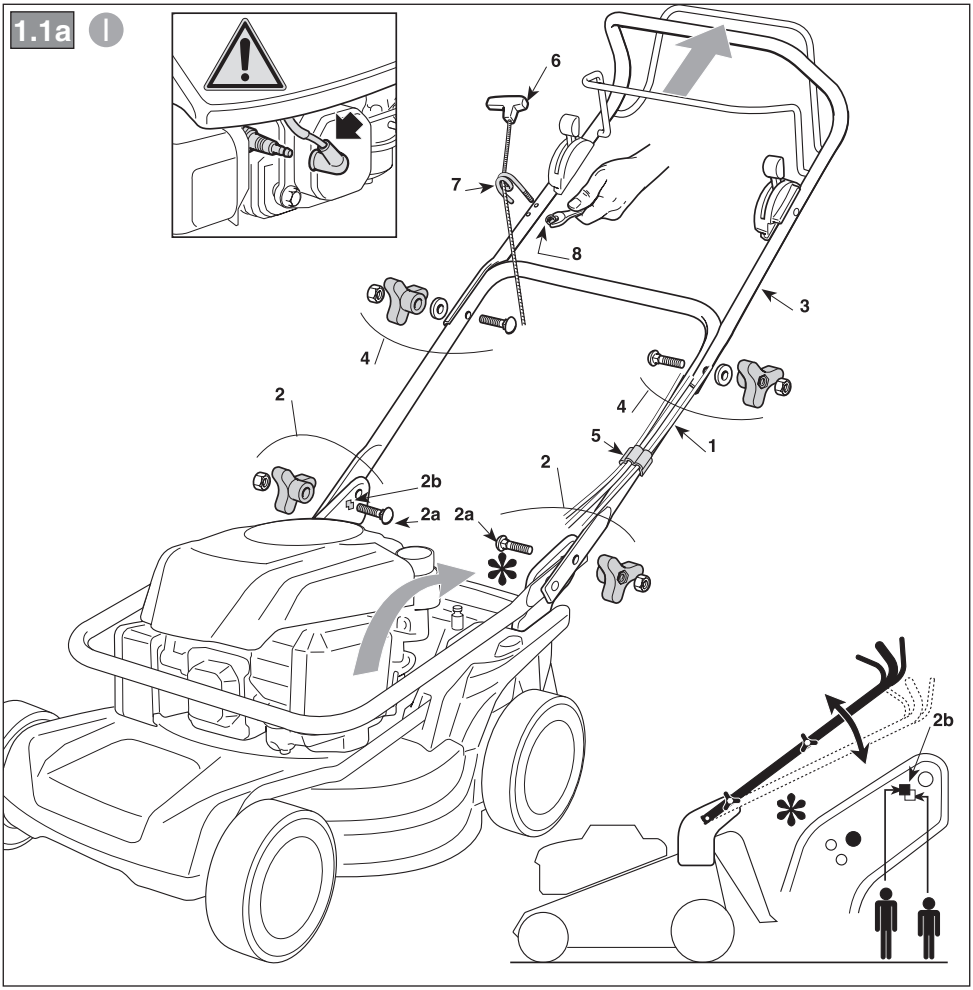
1.1a
6
7
8
3
4
4
2
5
1
2
2b
2a
2a
2b

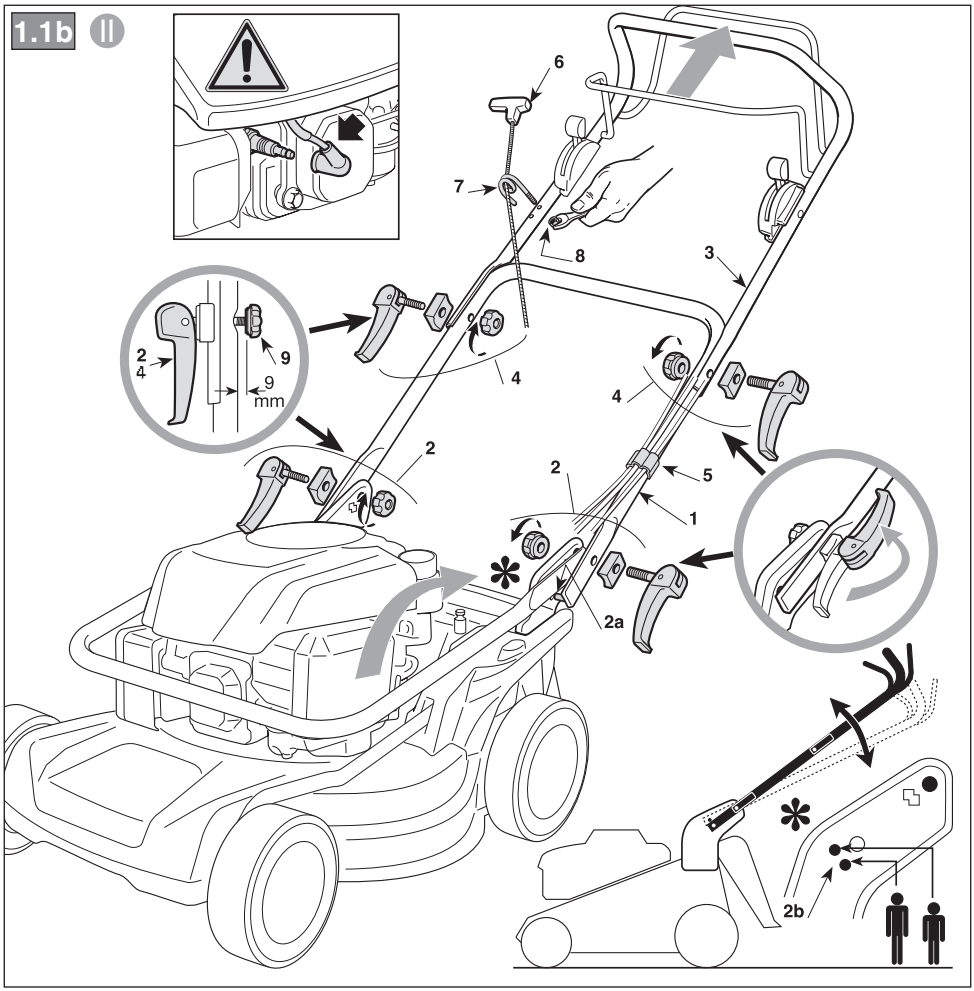
1.1b
II
6
7
8
3
2
4
9
9
mm
4
4
2
2
5
1
2a
2b

1.1c III

1.2a I

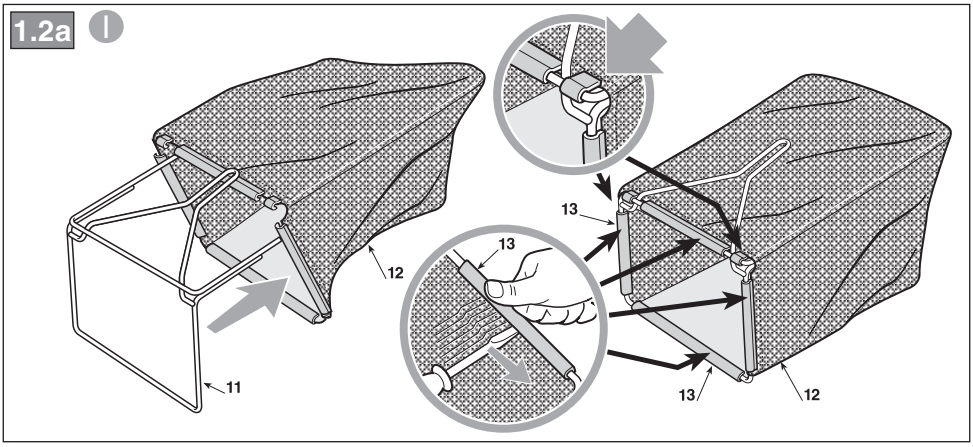

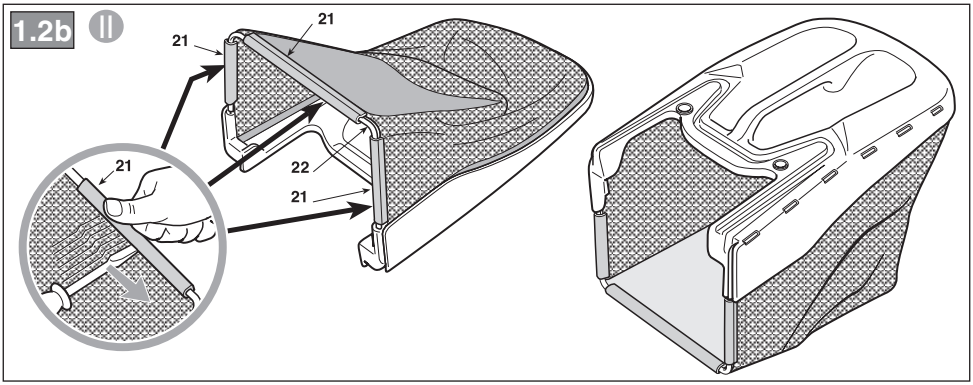
1.2b
II
21
21
21
22
21

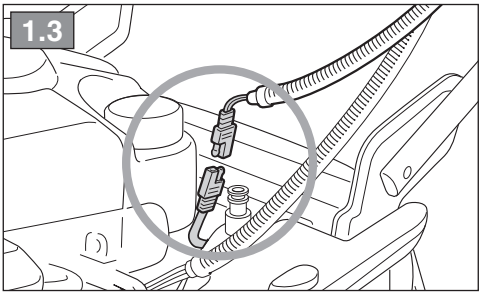
1.3

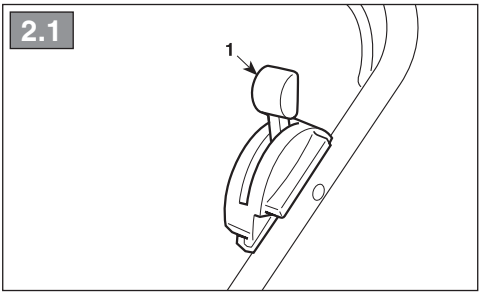
2.1
1

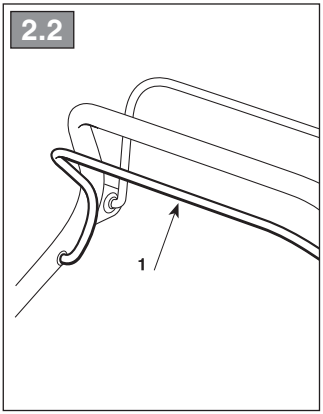
2.2
1

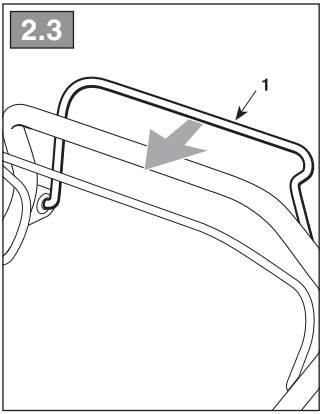
2.3
1

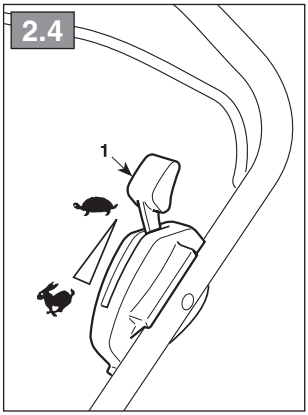
2.4
1

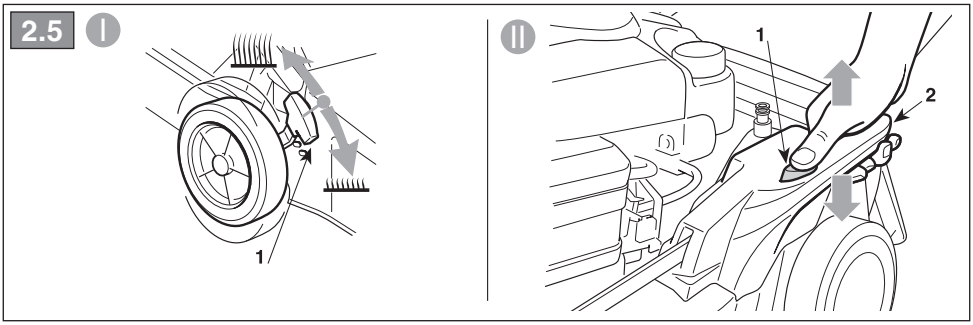
2.5
I
1
II
1
2

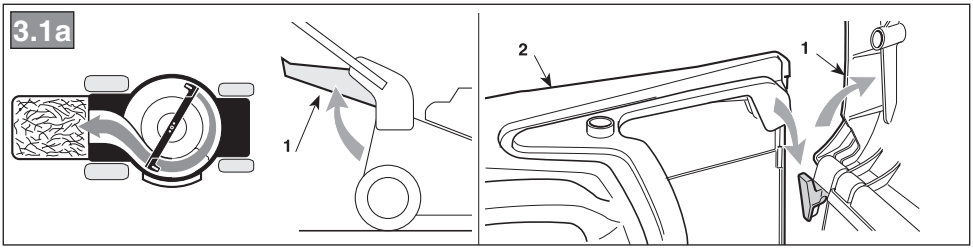
3.1a
1
2
1

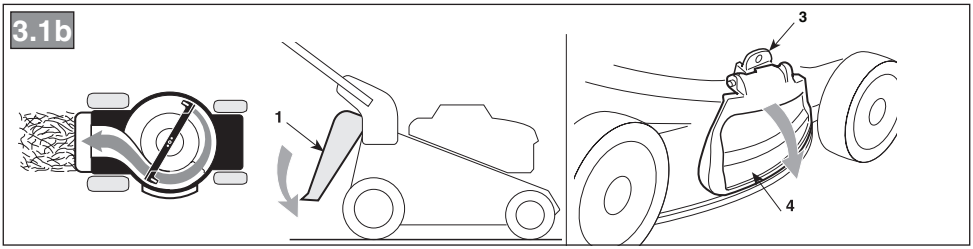
3.1b
1
3
4

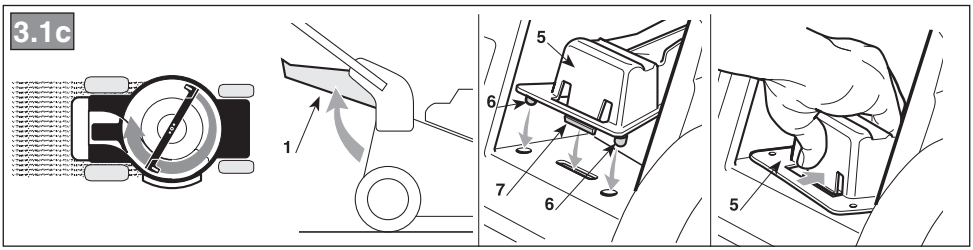
3.1c
1
5
6
7
6
5

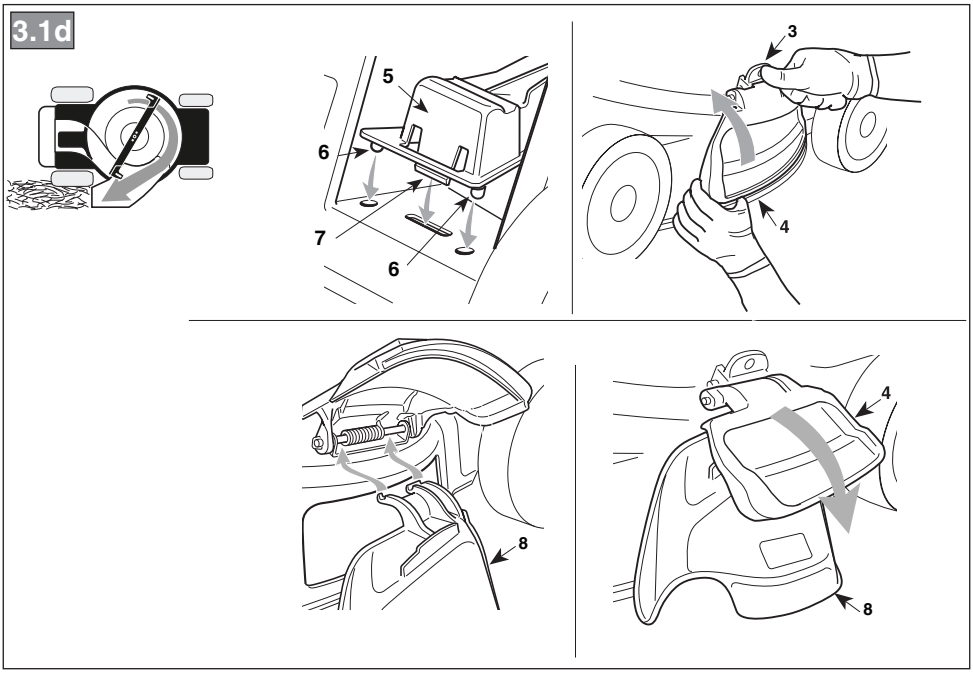
3.1d
5
6
7
6
3
4
8
4
8

3.2a

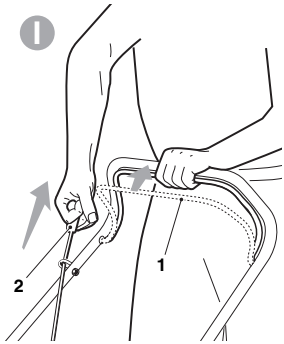

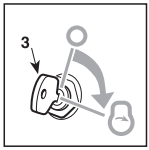

3.2b

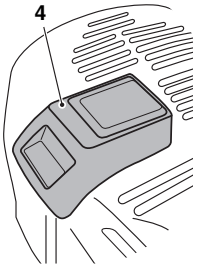

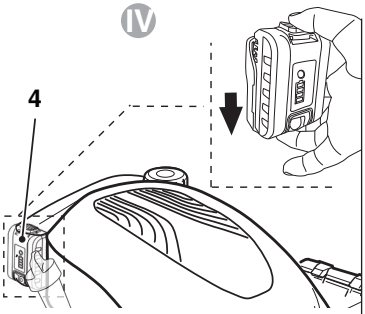

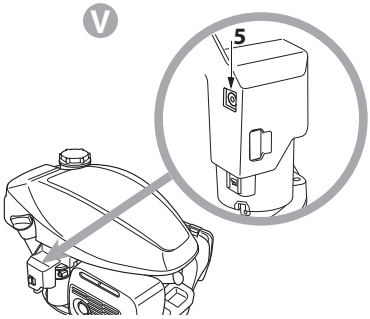

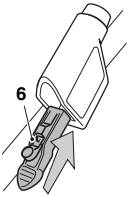

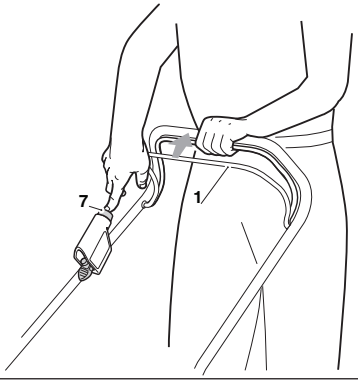

3.3

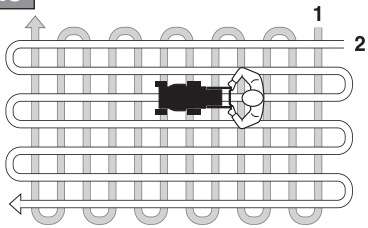

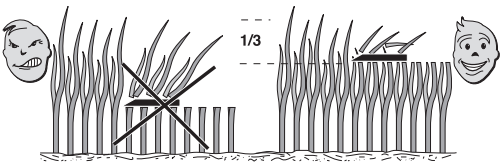

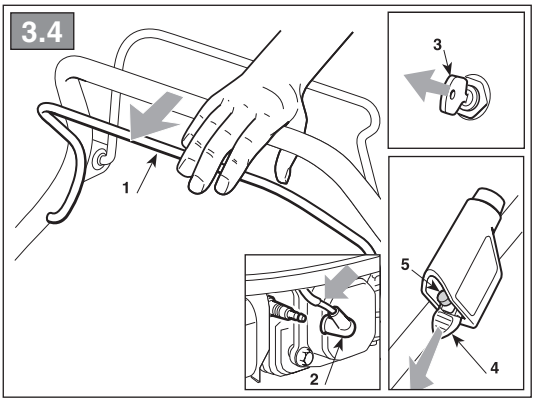
3.4
1
2
3
5
4

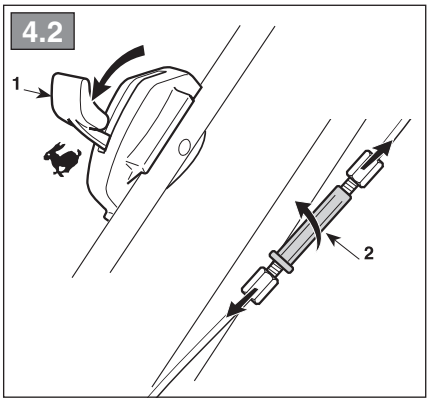
4.2
1
2

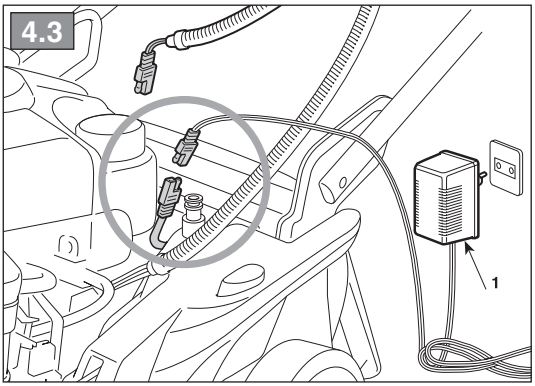
4.3
1

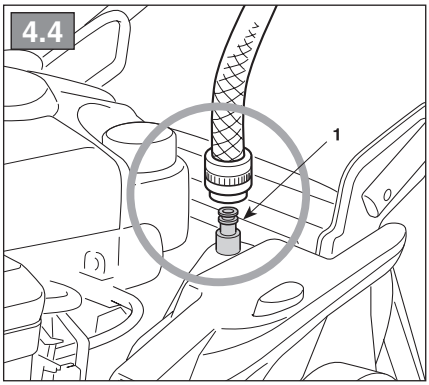
4.4
1

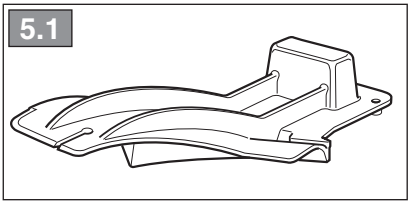
5.1

[1]	DATI TECNICI		MP1 504 Series	MP1 554 Series
[2]	Potenza nominale *	kW	1,97 ÷ 3,3	2,27 ÷ 3,82
[3]	Velocità mass. di funzionamento motore *	min^{-1}	2800 ± 100 ÷ 2900 ± 100	2800 ± 100 ÷ 2900 ± 100
[4]	Peso macchina *	kg	34 ÷ 41	35 ÷ 43
[5]	Ampiezza di taglio	cm	48	53
[6] [7]	Livello di pressione acustica Incertezza di misura	dB(A) dB(A)	84 1,31	87 0,45
[8] [7]	Livello di potenza acustica misurato Incertezza di misura	dB(A) dB(A)	96 0,84	98 0,63
[9]	Livello di potenza acustica garantito	dB(A)	96	98
[10] [7]	Livello di vibrazioni Incertezza di misura	m/s^2 m/s^2	7,9 2,49	9,0 2,41
[11]	Dimensioni: - lunghezza - larghezza - altezza	mm	1717 568 1190	1762 568 1190
[12]	Codice dispositivo di taglio		181004366/2	181004464/0
[13]	Accessori		-	-
[14]	Kit “Mulching”		✓	✓

* Per il dato specifico, fare riferimento a quanto indicato nell’etichetta di identificazione della macchina.

[1] **BG - ТЕХНИЧЕСКИ ДАННИ**
[2] Номинална мощност *
[3] Максимална скорост на функциониране на двигателя *
[4] Тегло на машината *
[5] Широчина на косене
[6] Ниво на звуково налягане
[7] Несигурност на измерване
[8] Измерено ниво на акустична мощност
[9] Гарантирано ниво на акустична мощност
[10] Ниво на вибрации
[11] Размери (дължина/ширина/височина)
[12] Код на инструмента за рязане
[13] Аксесоари
[14] Набор за "Mulching"

- За специфични данни, вижте посоченото на идентификационния етикет на машината.

[1] **BS - TEHNIČKI PODACI**
[2] Nazivna snaga *
[3] Maks. brzina rada motora *
[4] Težina mašine *
[5] Širina košenja
[6] Razina zvučnog pritiska
[7] Mjerna nesigurnost
[8] Izmjerena razina zvučne snage
[9] Garantovana razina zvučne snage
[10] Razina vibracija
[11] Dimenzije (dužina/širina/visina)
[12] Šifra rezne glave
[13] Dodatna oprema
[14] Pribor za malčiranje

- Za specifični podatak, pogledajte što je navedeno na identifikacijskoj naljepnici mašine.

[1] **CS - TECHNICKÉ PARAMETRY**
[2] Jmenovitý výkon *
[3] Maximální rychlost činnosti motoru *
[4] Hmotnost stroje *
[5] Šířka sečení
[6] Úroveň akustického tlaku
[7] Nepřesnost měření
[8] Naměřená úroveň akustického výkonu
[9] Úroveň zaručeného akustického výkonu
[10] Úroveň vibrací
[11] Rozměry (délka/šířka/výška)
[12] Kód sekacího zařízení
[13] Příslušenství
[14] Sada pro Mulčování

- Ohledně uvedeného údaje vycházejte z hodnoty uvedené na identifikačním štítku stroje.

[1] **DA - TEKNISKE DATA**
[2] Nominel effekt *
[3] Motorens maks. driftshastighed *
[4] Maskinens vægt *
[5] Klippebredde
[6] Lydtryksniveau
[7] Måleusikkerhed
[8] Målt lydeffektniveau
[9] Garanteret lydeffektniveau
[10] Vibrationsniveau
[11] Mål (længde/bredde/højde)
[12] Skæreanordningens varenr
[13] Tilbehør
[14] Sæt til "mulching"

- For disse data henvises til hvad der er angivet på maskinens identifikationsmærkat.

[1] **DE - TECHNISCHE DATEN**
[2] Nennleistung *
[3] Max. Betriebsgeschwindigkeit des Motors *
[4] Maschinengewicht *
[5] Schnittbreite
[6] Schalldruckpegel
[7] Messungenauigkeit
[8] Gemessener Schallleistungspegel
[9] Garantierter Schallleistungspegel
[10] Vibrationspegel
[11] Abmessungen (Länge/Breite/Höhe)
[12] Nummer Schneidwerkzeug
[13] Zubehör
[14] "Mulching-Kit"

- Für die genaue Angabe nehmen Sie bitte auf das Typenschild der Maschine Bezug.

[1] **EL - ΤΕΧΝΙΚΑ ΧΑΡΑΚΤΗΡΙΣΤΙΚΑ**
[2] Ονομαστική ισχύς *
[3] Μέγ. ταχύτητα λειτουργίας κινητήρα *
[4] Βάρος μηχανήματος *
[5] Πλάτος κοπής
[6] Στάθμη ακουστικής πίεσης
[7]] Αβεβαιότητα μέτρησης
[8] Μετρημένη στάθμη ακουστικής ισχύος
[9] Εγγυημένη στάθμη ακουστικής ισχύος
[10] Επίπεδο κραδασμών
[11] Διαστάσεις (μήκος/πλάτος/ύψος)
[12] Κωδικός συστήματος κοπής
[13] Εξαρτήματα
[14] Σετ "Mulching" (ψιλοτεμαχισμού)

- Για το συγκεκριμένο στοιχείο, ελέγξτε τα όσα αναγράφονται στην ετικέτα προσδιορισμού του μηχανήματος.

[1] **EN - TECHNICAL DATA**
[2] Rated voltage*
[3] Max. motor operating speed *
[4] Machine weight *
[5] Cutting width
[6] Acoustic pressure level
[7] Measurement uncertainty
[8] Measured acoustic power level
[9] Guaranteed acoustic power level
[10] Vibration level
[11] Dimensions (length/width/height)
[12] Cutting means code
[13] Attachments
[14] Mulching kit

- Please refer to the data indicated on the machine's identification label for the exact figure.

[1] **ES - DATOS TÉCNICOS**
[2] Potencia nominal *
[3] Velocidad máx. de funcionamiento motor *
[4] Peso máquina *
[5] Amplitud de corte
[6] Nivel de presión acústica
[7] Incertidumbre de medida
[8] Nivel de potencia acústica medido
[9] Nivel de potencia acústica garantizado
[10] Nivel de vibraciones
[11] Dimensiones (longitud/anchura/altura)
[12] Código dispositivo de corte
[13] Accesorios
[14] Kit para "Mulching"

- Para el dato específico, hacer referencia a lo indicado en la etiqueta de identificación de la máquina.

[1] **ET - TEHNILISED ANDMED**
[2] Nominaalvõimsus *
[3] Mootori töötamise maks. kiirus *
[4] Masina kaal *
[5] Lõikelaius
[6] Helirõhu tase
[7] Mõõtemääramatus
[8] Mõõdetud müravõimsuse tase
[9] Garanteeritud müravõimsuse tase
[10] Vibratsioonide tase
[11] Mõõtmed (pikkus/laius/kõrgus)
[12] Lõikeseadme kood
[13] Lisaseadmed
[14] "Multsimis" komplekt

- Konkreetse info jaoks viidata masina identifitseerimisetiketil märgitule.

[1] **FI - TEKNISET TIEDOT**
[2] Nimellisteho *
[3] Moottorin maksimaalinen toimintanopeus *
[4] Laitteen paino *
[5] Leikkuuleveys
[6] Akustisen paineen taso
[7] Mittauksen epävarmuus
[8] Mitattu äänitehotaso
[9] Taattu äänitehotaso
[10] Tärinätaso
[11] Koko (pituus/leveys/korkeus)
[12] Leikkuuvälineen koodi
[13] Lisävarusteet
[14] Silppuamisvarusteet

- Määrättyä arvoa varten, viittaa laitteen tunnuslaatassa annettuihin tietoihin.

[1] **FR - CARACTÉRISTIQUES TECHNIQUES**
[2] Puissance nominale*
[3] Vitesse max. de fonctionnement du moteur*
[4] Poids machine*
[5] Largeur de coupe
[6] Niveau de pression acoustique
[7] Incertitude de la mesure
[8] Niveau de puissance acoustique mesuré
[9] Niveau de puissance acoustique garanti
[10] Niveau de vibrations
[11] Dimensions (longueur / largeur / hauteur)
[12] Code organe de coupe
[13] Équipements
[14] Kit “Mulching”

- Pour la valeur spécifique, se référer à ce qui est indiqué sur la plaque d’identification de la machine.

[1] **HR - TEHNIČKI PODACI**
[2] Nazivna snaga*
[3] Maks. brzina rada motora*
[4] Težina stroja*
[5] Širina košnje
[6] Razina zvučnog tlaka
[7] Mjerna nesigurnost
[8] Izmjerena razina zvučne snage
[9] Zajamčena razina zvučne snage
[10] Razina vibracija
[11] Dimenzije (dužina/širina/visina)
[12] Šifra noža
[13] Dodatna oprema
[14] Komplet za “malčiranje”

- Specifični podatak pogledajte na identifikacijskoj etiketi stroja.

[1] **HU - MŰSZAKI ADATOK**
[2] Névleges teljesítmény *
[3] A motor max. üzemi sebessége *
[4] A gép tömege *
[5] Munkaszélesség
[6] Hangnyomásszint
[7] Mérési bizonytalanság
[8] Mért zajteljesítmény szint
[9] Garantált zajteljesítmény szint
[10] Vibrációszint
[11] Méretek (hosszúság/szélesség/magasság)
[12] Vágóegység kódszáma
[13] Tartozékok
[14] Mulcsozó” készlet”

- A pontos adatot lásd a gép azonosító adattábláján.

[1] **LT - TECHNINIAI DUOMENYS**
[2] Vardinė galia *
[3] Maksimalus variklio veikimo greitis *
[4] Įrenginio svoris*
[5] Pjovimo plotis
[6] Garso slėgio lygis
[7] Matavimo paklaida
[8] Išmatuotas garso galios lygis
[9] Garantuojamas garso galios lygis
[10] Vibracijų lygis
[11] Išmatavimai (ilgis/plotis/aukštis)
[12] Pjovimo įtaiso kodas
[13] Priedai
[14] „Mulčiavimo“ rinkinys

- Konkretūs specifiniai duomenys yra pateikti įrenginio identifikavimo etiketėje.

[1] **LV - TEHNISKIE DATI**
[2] Nominālā jauda *
[3] Maks. dzinēja griešanās ātrums *
[4] Mašīnas svars *
[5] Pļaušanas platums
[6] Skaņas spiediena līmenis
[7] Mērījumu kļūda
[8] Izmērītais skaņas intensitātes līmenis
[9] Garantētais skaņas intensitātes līmenis
[10] Vibrāciju līmenis
[11] Izmēri (garums/platums/augstums)
[12] Griezējierīces kods
[13] Piederumi
[14] Mulčēšanas” komplekts

- Precīza vērtība ir norādīta mašīnas identifikācijas datu plāksnītē

[1] **MK - ТЕХНИЧКИ ПОДАТОЦИ**
[2] Номинална моќност *
[3] Максимална брзина при работа на моторот *
[4] Тежина на машината *
[5] Обем на косење
[6] Ниво на акустичен притисок
[7] Отстапување од мерењата
[8] Измерено ниво на акустична моќност
[9] Гарантирано ниво на акустична моќност
[10] Ниво на вибрации
[11] Димензии (должина/ширина/висина)
[12] Код на уредот за сечење
[13] Дополнителна опрема
[14] Комплет за „мелење“

- За одреден податок, проверете дали истиот е посочен на етикетата за идентификација на машината

[1] **NL - TECHNISCHE GEGEVENS**
[2] Nominaal vermogen *
[3] Maximale snelheid voor de werking van de motor *
[4] Gewicht machine *
[5] Maaibreedte
[6] Niveau geluidsdruk
[7] Meetonzekerheid
[8] Gemeten akoestisch vermogen
[9] Gewaarborgd akoestisch vermogen
[10] Niveau trillingen
[11] Afmetingen (lengte/breedte/hoogte)
[12] Code snij-inrichting
[13] Toebehoren
[14] Kit “Mulching”

- Voor het specifiek gegeven, verwijst men naar wat aangegeven is op het identificatielabel van de machine.

[1] **NO - TEKNISKE DATA**
[2] Nominell effekt *
[3] Motorens maks driftshastighet *
[4] Maskinvekt *
[5] Klippebredde
[6] Lydtrykknivå
[7] Måleusikkerhet
[8] Målt lydeffektnivå
[9] Garantert lydeffektnivå
[10] Vibrasjonsnivå
[11] Mål (lengde/bredde/høyde)
[12] Artikkelnummer for klippeinnretning
[13] Tilbehør
[14] Mulching-sett

- For spesifikk informasjon, se referansen på maskinens identifikasjonsetikett.

[1] **PL - DANE TECHNICZNE**
[2] Moc znamionowa *
[3] Maks. prędkość obrotowa silnika *
[4] Masa maszyny *
[5] Szerokość koszenia
[6] Poziom ciśnienia akustycznego
[7] Błąd pomiaru
[8] Poziom mocy akustycznej zmierzony
[9] Gwarantowany poziom mocy akustycznej
[10] Poziom wibracji
[11] Wymiary (długość/szerokość/wysokość)
[12] Kod agregatu tnącego
[13] Akcesoria
[14] Zestaw mulczujący

- W celu uzyskania konkretnych danych, należy się odnieść do wskazówek zamieszczonych na tabliczce identyfikacyjnej maszyny.

[1] **PT - DADOS TÉCNICOS**
[2] Potência nominal *
[3] Velocidade máx. de funcionamento motor *
[4] Peso da máquina *
[5] Amplitude de corte
[6] Nível de pressão acústica
[7] Incerteza de medição
[8] Nível de potência acústica medido
[9] Nível de potência acústica garantido
[10] Nível de vibrações
[11] Dimensões (comprimento/largura/altura)
[12] Código dispositivo de corte
[13] Acessórios
[14] Kit "Mulching"

- Para o dado específico, consultar a etiqueta de identificação da máquina.

[1] **RO - DATE TEHNICE**
[2] Putere nominală *
[3] Viteza max. de funcționare a motorului *
[4] Greutatea mașinii *
[5] Lățimea de tăiere
[6] Nivel de presiune acustică
[7] Nesiguranță în măsurare
[8] Nivel de putere acustică măsurat.
[9] Nivel de putere acustică garantat
[10] Nivel de vibrații
[11] Dimensiuni (lungime/lățime/înălțime)
[12] Codul dispozitivului de tăiere
[13] Accesorii
[14] Kit de mărunțire „Mulching"

- Pentru informația specifică, consultați datele de pe eticheta de identificare a mașinii.

[1] **RU - ТЕХНИЧЕСКИЕ ХАРАКТЕРИСТИКИ**
[2] Номинальная мощность *
[3] Макс. число оборотов двигателя *
[4] Вес машины *
[5] Ширина скашивания
[6] Уровень звукового давления
[7] Погрешность измерения
[8] Измеренный уровень звуковой мощности
[9] Гарантируемый уровень звуковой мощности
[10] Уровень вибрации
[11] Габариты (длина/ширина/высота)
[12] Код режущего приспособления
[13] Дополнительное оборудование
[14] Комплект "Мульчирование"

- Точное значение см. на идентификационном ярлыке машины.

[1] **SK - TECHNICKÉ PARAMETRE**
[2] Menovitý výkon *
[3] Maximálna rýchlosť činnosti motora *
[4] Hmotnosť stroja *
[5] Šírka kosenia
[6] Úroveň akustického tlaku
[7] Nepresnosť merania
[8] Úroveň nameraného akustického výkonu
[9] Úroveň zaručeného akustického výkonu
[10] Úroveň vibrácií
[11] Rozmery (dĺžka/šírka/výška)
[12] Kód kosiaceho zariadenia
[13] Príslušenstvo
[14] Súprava pre Mulčovanie

- Ohľadne uvedeného parametra vychádzajte z hodnoty uvedenej na identifikačnom štítku stroja.

[1] **SL - TEHNIČNI PODATKI**
[2] Nazivna moč *
[3] Najvišja hitrost delovanja motorja *
[4] Teža stroja *
[5] Širina reza
[6] Raven zvočnega tlaka
[7] Merilna negotovost
[8] Izmerjena raven zvočne moči
[9] Zajamčena raven zvočne moči
[10] Nivo vibracij
[11] Dimenzije (dolžina/širina/višina)
[12] Šifra rezalne naprave
[13] Dodatna oprema
[14] Komplet za mulčenje

- Za specifični podatek glej identifikacijsko nalepko stroja.

[1] **SR - TEHNIČKI PODACI**
[2] Nazivna snaga *
[3] Maks. radna brzina motora *
[4] Težina mašine *
[5] Širina košenja
[6] Nivo zvučnog pritiska
[7] Merna nesigurnost
[8] Izmereni nivo zvučne snage
[9] Garantovani nivo zvučne snage
[10] Nivo vibracija
[11] Dimenzije (dužina/širina/visina)
[12] Šifra rezne glave
[13] Dodatna oprema
[14] Komplet za malčiranje

- Za specifični podatak, pogledajte podatke navedene na identifikacijskoj nalepnici mašine.

[1] **SV - TEKNISKA SPECIFIKATIONER**
[2] Nominell effekt *
[3] Motorns maximala funktionshastighet *
[4] Maskinvikt *
[5] Skärbredd
[6] Ljudtrycksnivå
[7] Tvivel med mått
[8] Uppmätt ljudeffektnivå
[9] Garanterad ljudeffektnivå
[10] Vibrationsnivå
[11] Dimensioner (längd/bredd/höjd)
[12] Skärenhetens kod
[13] Tillbehör
[14] Sats för "Mulching"

- För specifik information, se uppgifterna på maskinens märkplåt.

[1] **TR - TEKNİK VERİLER**
[2] Nominal güç *
[3]] Motorun maksimum çalışma hızı *
[4] Makine ağırlığı *
[5] Kesim genişliği
[6] Ses basınç seviyesi
[7] Ölçü belirsizliği
[8] Ölçülen ses gücü seviyesi
[9] Garanti edilen ses gücü seviyesi
[10] Titreşim seviyesi
[11] Ebatlar (uzunluk/genişlik/yükseklik)
[12] Kesim düzeni kodu
[13] Aksesuarlar
[14] Malçlama" kiti

- Spesifik değer için, makine belirleme etiketinde gösterilenleri referans alın.

EN

WARNING: READ THOROUGHLY THE INSTRUCTION BOOKLET BEFORE USING THE MACHINE. Keep for future reference

SAFETY REGULATIONS please follow meticulously

A) TRAINING

1) WARNING! Read these instructions carefully before operating the machine. Become acquainted with the controls and the proper use of the machine. Learn how to stop the engine quickly. Failure to follow the warnings and instructions may result in fire and/or serious injury. Save all warnings and instructions for future reference.
2) Never allow children or persons unfamiliar with these instructions to use the machine. Local laws can restrict the minimum age of the operator.
3) Never use the lawnmower while people, especially children, or pets are nearby.
4) Never use the machine if the user is tired or unwell, or has taken medicine, drugs, alcohol or any substances which may slow his reflexes and compromise his judgement.
5) Bear in mind that the operator or user is responsible for accidents or unexpected events occurring to other people or their property. It is the user's responsibility to assess the potential risk of the area where work is to be carried out, and to take all the necessary precautions to ensure his own safety and that of others, particularly on slopes or rough, slippery and unstable ground.
6) If the machine is sold or lent to others, make sure that the operator looks over the user instructions contained in this manual.

B) PRELIMINARY OPERATIONS

1) While using the machine, always wear anti-slip and resistant work footwear and long pants. Do not operate the machine when barefoot or wearing open sandals. Avoid wearing chains, bracelets, clothing that is loose fitting or has hanging cords or ties. Tie hair back if it is long. Always wear protective earplugs.
2) Thoroughly inspect the entire work area and remove anything that could be thrown by the machine or damage the cutting unit or engine (stones, branches, iron wire, bones, etc.).
3) WARNING: DANGER! Petrol is highly flammable.
– Store the fuel in special containers;
– Add fuel, using a funnel, only outdoors; do not smoke during this operation and each time fuel is handled;
– Top-up with fuel before igniting the engine; never remove the tank cap or add fuel while the engine is running or when it is hot;
– If you have spilled some fuel, do not attempt to ignite the engine but move the machine away from the area of spillage and avoid creating any source of ignition until the fuel has evaporated and fuel vapours have dissipated:
– Always put the tank and fuel container caps back on and tighten well;
4) Replace faulty silencers.
5) Before using the machine, check its general condition and in particular:
– the appearance of the cutting means, and check that the screws and cutting unit are not worn or damaged. Replace the entire cutting means and all damaged or worn screws to preserve balance. Any repairs must be done at a specialised centre
– don't force the safety lever as it must move freely; it should return automatically and rapidly back to the neutral position, resulting in the stopping of the cutting means
6) Check the battery status regularly (where applicable). Replace it if there is any damage to the casing, cover or terminals.
7) Before starting work, always fit the exit guards (grass catcher, side discharge guard or rear discharge guard).

C) DURING USE

1) Do not operate the engine in a confined space where dangerous carbon monoxide fumes can develop. All ignition operations have to be effected in an open or well-ventilated area. Always remember that exhaust fumes are toxic.
2) Work only in daylight or with good artificial light in good visibility conditions. Keep persons, children and animals away from the working area.
3) If possible, avoid mowing wet grass. Avoid working in the rain and when there is a thunderstorm risk. Do not use the machine in bad weather conditions, especially when there is risk of lightening.
4) Make sure you have a steady foothold on slopes.
5) Never run, always walk. Do not allow the lawnmower to pull you along.
6) Pay special attention when approaching obstacles that could compromise visibility.
7) Always mow across a slope and never up and down it, being very careful when changing direction that the wheels do not hit any obstacles (such as stones, branches, roots, etc.) that may cause the machine to slide sideways or make you lose control of it.
8) The machine must not be used on slopes of over 20°, regardless of the mowing direction.
9) Be extremely careful when pulling the lawnmower toward you. Look behind you to make sure there are no obstacles before and during operations in reverse gear.
10) Immobilise the cutting means if the lawnmower must be inclined for transport, when moving over surfaces other than grass and when the lawnmower is transported from or to an area that must be cut.
11) Pay attention to traffic when using the machine near roads.
12) Never operate the machine with damaged guards or without the grass catcher, side discharge guards or rear discharge guards.
13) Be very careful near ravines, ditches or embankments.
14) Ignite the engine carefully following the instructions, keeping feet away from the cutting means.
15) Do not incline the lawnmower during ignition. Ignite the machine on a flat surface without obstacles or high grass.
16) Never place your hands and feet near or under rotating parts. Keep away from the discharge opening.
17) Do not lift or transport the lawnmower when the engine is running.
18) Do not tamper with or disable safety systems.
19) Do not change the engine settings or over-rev the engine.
20) Do not touch the engine parts as they get very hot when running. Danger of burns.

21) On power-driven models, disengage the wheel drive before igniting the engine.
22) Use manufacturer-recommended attachments only.
23) Don't use the machine if the attachments/tools are not installed in their seats.
24) Disengage the cutting means, switch off the engine and unplug the spark plug cable (making sure that all moving parts are stationary):
– When transporting the machine;
– Whenever you leave the machine unattended; also remove the key on models with electric ignition systems;
– Before clearing blockages or unclogging the discharge chute;
– Before checking, cleaning or working on the machine;
– After striking a foreign object. Inspect the machine for damage and make repairs before using it again.
25) Disengage the cutting means and switch off the engine:
– Before refuelling;
– Whenever you remove or reattach the grass catcher;
– Whenever you remove or reattach the side discharge chute;
– Before adjusting the cutting height, if this operation can not be performed from the driving seat.
26) When working, always keep a safe distance from the rotary cutting means, given by the length of the handle.
27) Reduce the throttle setting before stopping the engine. Shut off the fuel supply on completing the work, following the instructions in the engine manual.
28) WARNING – If something breaks or an accident occurs whilst working, turn off the engine immediately and move the machine away to prevent further damage; if an accident occurs with injuries or third parties are injured, carry out the first aid measures most suitable for the situation immediately and contact the medical authorities for any necessary health care. Carefully remove any debris that might cause damage or harm persons or animals should it not be seen.
29) WARNING – The noise and vibration levels shown in these instructions are the maximum levels for use of the machine. The use of an unbalanced cutting means, the excessive speed of movement, or the absence of maintenance have a significant influence on noise emissions and vibrations. Consequently, it is necessary to take preventive steps to eliminate possible damage due to high levels of noise and stress from vibration. Maintain the machine well, wear ear protection devices, and take breaks while working.

D) MAINTENANCE AND STORAGE

1) WARNING! – Before cleaning or doing maintenance work, disconnect the spark plug cable and read the relevant instructions. Wear proper clothing and protective gloves whenever your hands are at risk.
2) WARNING! – Never use the machine with worn or damaged parts. Faulty or worn-out parts must always be replaced and not repaired. Only use original spare parts: The use of non-original and/or incorrectly fitted parts will jeopardize the safety of the machine, may cause accidents or personal injuries for which the Manufacturer is under no circumstance liable or responsible.
3) Any adjustments or maintenance operations not described in this manual must be carried out by your Dealer or a specialized Service Centre with the necessary knowledge and equipment to ensure that the work is done correctly maintaining the machine's original safety level. Any operations performed in unauthorized centres or by unqualified persons will totally invalidate the Warranty and all obligations and responsibilities of the Manufacturer.
4) After each use, disconnect the spark plug cable and check for damage.
5) Keep all nuts, bolts and screws tight to be sure the machine is in safe working condition. Routine maintenance is essential for safety and for maintaining a high performance level.
6) Check that the cutting means screws are properly tightened on a regular basis.
7) Wear work gloves when handling, disassembling and reassembling all cutting means.
8) Keep the cutting means well balanced during sharpening. All work on the cutting means (disassembly, sharpening, balancing, reassembly and/or replacing) are demanding jobs that require special skills as well as special tools. For safety reasons, these jobs are best carried out at a specialised centre.
9) Be careful during adjustment of the machine to prevent entrapment of the fingers between moving parts of the cutting means and fixed parts of the machine.
10) Do not touch the cutting means until the spark plug cable has been disconnected and the cutting means is completely stationary. When servicing the cutting means, bear in mind that, even though the spark plug cable is disconnected, the cutting means can still move.
11) Check the side discharge guard, the rear discharge guard and the grass catcher frequently. Replace them if they are damaged.
12) Replace any instruction or warning message stickers, if damaged.
13) Store the machine out of the reach of children.
14) Do not store the machine with fuel in the tank in an area where the fuel vapours could reach an open flame, a spark or a strong heat source.
15) Allow the engine to cool down before storing in any enclosure.
16) To reduce fire hazards, keep the engine, silencer, battery compartment and petrol storage area free of grass, leaves, or excessive grease. Always empty the grass catcher and do not leave containers full of cut grass inside storage areas.
17) To reduce fire hazards, check there are no oil and/or fuel leaks on a regular basis.
18) If the fuel tank has to be emptied, this should be done outdoors once the engine has cooled down.

E) TRANSPORTATION AND HANDLING

1) Whenever the machine is to be handled, lifted, transported or tilted you must:
– Wear sturdy work gloves;
– Grasp the machine at the points that offer a safe grip, taking into account the weight and relative distribution of the same
– Use an appropriate number of people for the weight of the machine and the characteristics of the vehicle or the place where it must be placed or collected
– Make sure that machine movements do not cause petrol leaks, damage or injuries.
2) During transport, fasten the machine securely with cables or chains.

F) ENVIRONMENTAL PROTECTION

1) Environmental protection should be a priority of considerable importance when using the machine, for the benefit of both social coexistence and the environment in which

we live. Try not to cause any disturbance to the surrounding area.
2) Scrupulously comply with local regulations and provisions for the disposal of packaging, oils, petrol, filters, damaged parts or any elements which have a strong impact on the environment; this waste must not be disposed of as normal waste, it must be separated and taken to specified waste disposal centres where the material will be recycled.
3) Scrupulously comply with local regulations for the disposal of waste materials after mowing.
4) When decommissioning, do not pollute the environment with the machine, but hand it over to a disposal centre, in accordance with the local laws in force

GETTING TO KNOW THE MACHINE

MACHINE DESCRIPTION AND SCOPE OF APPLICATION

This machine is a garden tool and precisely a pedestrian-controlled lawnmower.

The machine is essentially composed of an engine which drives a cutting means enclosed in a casing, equipped with wheels and a handle.

The operator is able to operate the machine and use the main controls, always staying behind the handle at a safe distance from the rotating cutting means. If the operator leaves the machine, the engine and cutting means will stop within a few seconds.

Intended use

This machine was designed and manufactured for cutting (and collecting) grass in gardens and grassy areas, in areas in proportion to its cutting capacity, done by a pedestrian operator.
The presence of attachments or specific devices can prevent cut grass from being collected or produce a mulching effect, depositing cut grass on the ground.

This machine can:
- mow the grass and collect it in the grass catcher;
- mow the grass and discharge it on the ground from the rear section;
- mow, chop and deposit the grass on the ground (mulching effect);
- mow the grass and discharge it sideways (for suitably equipped machines).

Improper use

Any other usage not in keeping with the above-mentioned ones may be hazardous and harm persons and/or damage things. Examples of improper use may include, but are not limited to:
– transporting persons, children or animals on the machine;
– letting oneself be transported by the machine;
– using the machine to tow or push loads;
– using the machine for leaf or debris collection;
– using the machine to trim hedges, or for cutting vegetation other than grass;
– use of the machine by more than one person;
– using the cutting means on surfaces other than grass.

User types

This machine is intended for use by consumers, i.e. non-professional operators. The machine is intended for “DIY” use only

IDENTIFICATION LABEL AND MACHINE COMPONENTS (see figures on page ii)

1. Acoustic power level
2. CE conformity marking
3. Year of manufacture
4. Type of lawnmower
5. Serial number
6. Name and address of Manufacturer
7. Article Code
8. Engine rated power and maximum operating speed
9. Weight in kg

11. Chassis
12. Engine
13. Cutting means
14. Rear discharge guard
14a. Side discharge chute (if provided)
14b. Side discharge guard (if provided)
15. Grass catcher
16. Handle
17. Throttle (if provided)
18. Engine brake lever / cutting means
19. Drive lever (if provided)
20. Variable speed drive (if fitted)

As soon as you have purchased the machine, do not forget to write the identification numbers (3 – 4 – 5) in the spaces on the last page of the manual.

The example of the Declaration of Conformity is provided on the penultimate page of the manual.

DESCRIPTION OF SYMBOLS INDICATED ON THE CONTROLS (where foreseen)

21. Slow
22. Fast
23. Choke
24. Engine stop
25. Drive on
26. Idle
27. Engine ignition
36. Grass catcher content indicator: up (a) = empty / down (b) = full

SAFETY REQUIREMENTS – Your lawnmower should be used with due care and attention. Therefore, pictograms have been placed on various parts of the machine to remind you of the main precautions to be taken. Their meaning is explained below. You are also asked to carefully read the safety regulations in the specific chapter of this manual. Replace damaged or illegible labels.

41. Warning: Read the instruction handbook before using the machine.
42. Risk of thrown objects. Keep all persons away from the work area whilst mowing.
43. Danger of cutting yourself. Cutting means in motion. Do not put hands or feet near or under the opening of

the cutting means housing. Disconnect the spark plug cap and read the instructions before carrying out any maintenance or repairs.

44. Danger of cutting yourself. Cutting means. Do not put hands or feet near or under the opening of the cutting means housing.

OPERATING INSTRUCTIONS

For information on the engine and the battery (if supplied), read the relevant owner manuals.

NOTE – The number which precedes each paragraph links the references in the text to the respective illustrations (listed on page iii and following pages).

1. COMPLETE ASSEMBLY

NOTE *The machine can be supplied with some parts already assembled.*

⚠ WARNING! ***Unpacking and completing the assembly should be done on a flat and stable surface, with enough space for moving the machine and its packaging, always making use of suitable equipment.***
Disposal of the packaging should be done in accordance with the local regulations in force.

1.1a Assembling the handle (Type"I")

Return the lower part of the handle (1) to the work position and fasten it to the side chassis supports as shown in the diagram, using the knobs (2) and relative nuts and bolts supplied.
The handle (1) can be height-adjusted in two different positions by inserting the pins (2a) in one of the two square seats (2b) on the supports.
Assemble the top part (3) and fasten in place using the knobs (4) and relative screws supplied.
Secure the control cables using the cable fastener (5).

- **Manual ignition models**
- **Electric key ignition models**
  Insert the starter cable (6) in the spiral (7) and tighten the nut (8).

1.1b Assembling the handle (Type"II")

Return the lower part of the handle (1) to the work position and fasten it to the side chassis supports as shown in the diagram, using the handles (2) and relative nuts and bolts.
Make sure the pins (2a) are inserted in one of the two holes (2b) on the side supports of the chassis so as to achieve the correct height of the handle.
Assemble the top part (3) and fasten in place using the levers (4) and relative screws previously removed from their respective holes.
The rings (9) on the levers (2) and (4) must be screwed on so that the distance from the handle is around 9 mm (when the levers are released) to ensure secure fastening without requiring too much effort to tighten or release the levers.
Secure the control cables using the cable fastener (5).

- **Manual ignition models**
- **Electric key ignition models**
  Insert the starter cable (6) in the spiral (7) and tighten the nut (8).

1.1c Assembling the handle (Type"III")

Return the handle (1) to the work position and fasten it to the side chassis supports as shown in the diagram, using the handles (2) and relative nuts and bolts.
Make sure the pins (2a) are inserted in one of the two holes (2b) on the side supports of the chassis so as to achieve the correct height of the handle.
The rings (9) on the levers (2) must be screwed on so that the distance from the handle is around 9 mm (when the levers are released) to ensure secure fastening without requiring too much effort to tighten or release the levers.

- **Manual ignition models**
- **Electric key ignition models**
  Insert the starter cable (6) in the spiral (7) and tighten the nut (8).

1.2a Assembling the grass catcher (Type"I")

Insert the frame (11) in the grass catcher (12) and snap on all the plastic sections (13), using a screwdriver as illustrated.

1.2b Assembling the grass catcher (Type"II")

With the grass catcher turned upside down, snap on all the plastic sections (21) to the chassis (22), using a screwdriver as illustrated.

1.3 Battery connection

- **Electric key ignition models**
  Connect the battery cable to the general wiring connector on the lawnmower.
- **Electric push-button ignition models**
  Insert the supplied battery in the relative engine compartment (par. 3.2b, "III - "IV").
  Some models have an engine with non-removable built-in battery (par. 3.2b, "V).

Follow the instructions in the engine manual for further details on the engine.

2. CONTROLS DESCRIPTION

NOTE *The meanings of the symbols on controls are explained in the previous pages.*

2.1 Throttle lever (if fitted)

The throttle adjusts the engine rpm and the speed of the cutting means.
The throttle is controlled by the lever (1).
Lever positions are indicated on the relevant plate.
Some models have a fixed speed engine with no need for a throttle.

2.2 Engine brake lever / cutting means

The cutting means brake is controlled by the lever (1) which must be held against the handle during ignition and during lawnmower operations.
The engine stops when the lever is released.

2.3 Drive lever (where applicable)

On power-driven models, push the lever (1) toward the handle for forward movement.
The lawnmower stops moving forward when the lever is released.
The engine must always be ignited with the drive disengaged.

⚠ WARNING! ***To prevent damage to the transmission, do not pull the machine backwards with the transmission engaged.***

2.4 Converter control lever (if fitted)

In the models with drive systems, the converter control lever (if fitted) allows the operator to regulate forward gear speed. To do so, move the lever (1) following the indications provided near the control lever.

IMPORTANT *The engine must be running and the drive engaged when switching from one speed to another.*
Do not touch the converter control when the engine is stopped. Doing this could damage the converter.

NOTE *If the machine does not move forward with the lever in the «🐢» position, simply move the lever to «🐇» and then immediately return to the «🐢» position.*

IMPORTANT *The engine must be running and the drive engaged when switching from one speed to another.*
Do not touch the converter control when the engine is stopped. Doing this could damage the converter.

2.5 Cutting height adjustment

- **Type "I"**
  The cutting height is adjusted by the specific lever (1).
  DO THIS WHEN THE CUTTING MEANS IS STATIONARY.
- **Type "II"**
  The cutting height is adjusted by pressing the button (1) and, using the handgrip (2), lifting or lowering the chassis to the desired position.
  DO THIS WHEN THE CUTTING MEANS IS STATIONARY.

3. GRASS CUTTING

NOTE *This machine can be used to mow lawns in a number of different ways; before starting work, prepare the machine based on how the lawn is to be mowed.*
DO THIS WHEN THE ENGINE IS OFF.

3.1a Preparation for mowing and grass collection by the grass catcher:

– Lift the rear discharge guard (1) and fasten the grass catcher (2) correctly as shown in the illustration.

3.1b Preparation for mowing and rear grass discharge on the ground

– Remove the grass catcher and check that the rear discharge guard (1) maintains its lowered position.
– On models with a side discharge: make sure that the side discharge guard 4) is lowered and blocked by the safety lever (3).

3.1c Preparation for mowing and mulching (where applicable)

– On models with a side discharge: make sure that the side discharge guard 4) is lowered and blocked by the safety lever (3).
– Lift the rear discharge guard (1) and fit the chute cap (5) in the discharge opening, keeping it slightly tilted to the right. Fasten it by fitting the two pins (6) into the holes provided until the fastener tooth (7) clicks into place.

To remove the deflector cap (5), lift the rear discharge guard (1) and push in the middle to release the tooth (7).

3.1d Preparation for mowing and side discharge of grass (where applicable)

– Lift the rear discharge guard (1) and fit the chute cap (5) in the discharge opening, keeping it slightly tilted to the right. Fasten it by fitting the two pins (6) into the holes provided until the fastener tooth (7) clicks into place.
– Push the safety lever (3) slightly and lift the side discharge guard (4).
– Insert the side discharge chute (8) as shown in the figure.
– Close the side discharge guard (4) so that the side discharge chute (8) is locked in place.

To remove the side discharge chute:
– Push the safety lever (3) slightly and lift the side discharge guard (4).
– Release the side discharge chute (8).

To remove the chute flap:
– Lift the rear discharge guard (1).
– Push in the middle to release the tooth (7).

3.2 Engine ignition

- **Models with throttle**
  To start the engine, set the throttle control to "Starter" (23).
  When the engine is running, set the throttle control to "Fast" (22).

3.2a

- **Manual ignition models ("I")**

Pull the cutting means brake lever (1) against the handle and firmly tug the knob on the ignition cable (2).

- **Electric key ignition models**

Pull the cutting means brake lever (1) against the handle and turn the ignition key (3).

3.2b

- **Electric push-button ignition models ("III - "IV" - "V")**

– Insert the supplied battery in the relative engine compartment (4, "III - "IV"); (follow the instructions provided in the engine manual).
  A motor with non-removable built-in battery is included on some models ("V").
– Insert the key as far as possible (if fitted) (6).
– Pull the engine cutting means brake lever towards the handle (1).

In "V" motors, the battery charge indicator (5) turns on or flashes for 5 seconds to indicate:

- Indicator on = the battery is charged
- Indicator flashing = the battery is low
- Indicator off = the battery is dead Follow the instructions in the motor instruction manual for emergency charging using the external USB charging device (not supplied with the machine).

NOTE *Keep pulling the engine / cutting means brake or the engine will stop.*

– Press and hold the starter button until the engine switches on (7).

The battery charge status indicator (5) turns off in "V" motors.

Follow the instructions in the engine manual for further details on the engine.

3.3 Mowing the lawn

The appearance of the lawn will improve if you alternate cutting in both directions at the same height.

When the grass catcher is too full, grass collection is no longer efficient and the sound of the lawnmower changes.
To remove and empty the grass catcher,
– stop the engine and wait for the cutting means to stop;
– lift the rear discharge guard, grasp the handle and remove the grass catcher keeping it in an erect position.

- **For mulching or rear grass discharge:** always avoid removing a large quantity of grass. Never cut more than one third of the total grass height per single pass! Regulate the forward speed according to the lawn conditions and the amount of grass removed.
- **For side discharge (if applicable):** it is best to mow in a pattern where cut grass is not discharged on the grass still to be cut.
- **For a grass catcher with contents indicator device (if applicable):** while working with the cutting means running, the indicator remains raised for as long as the grass catcher is able to hold cut grass; when it lowers, it means that the grass catcher is full and must be emptied.

Lawn care recommendations

Each type of grass has different characteristics and may thus require different ways of caring for the lawn; always read the instructions on seed boxes for mowing height for the growing conditions in the work area.

Keep in mind that most grass is made up of a stem and one or more leaves. If leaves are fully cut, the lawn is damaged and growth is more difficult.

The following indications generally apply:
– cutting too low tears and uproots the grass, giving it a "spotted" appearance;
– in the summer, cutting must be higher to prevent the ground from drying;
– do not cut wet grass; this could reduce cutting means efficiency due to sticky grass and tear the lawn.
– for particularly high grass, initially mow at the maximum height allowed by the machine then mow again after two or three days.

3.4 When work is finished

When work has been completed, release the brake lever (1) and disconnect the spark plug cap (2).
- **Electric key ignition models**
  Remove the ignition key (3).
- **Electric push-button ignition models**
  Press the tab (5) and remove the consent key (4).

WAIT UNTIL THE CUTTING MEANS STOPS before proceeding any further.

4. ROUTINE MAINTENANCE

Store the lawnmower in a dry place.

IMPORTANT *Routine and accurate maintenance, at least once a year, is essential in maintaining original machine safety and performance levels.*

Adjustments or maintenance operations must only be performed with the engine switched off and the spark plug cable disconnected.

1) Wear strong protective gloves before cleaning, maintaining or adjusting the machine.
2) Accurately wash the machine with water after cutting; remove grass debris and mud accumulated in the chassis to prevent it from drying and causing problems the next time the lawnmower is used.
3) Paint on internal chassis parts may start to flake over time due to the abrasive action of cut grass; if this happens, promptly touch-up with rust-proof paint to prevent rusting that could corrode the metal.
4) If accessing the lower part is necessary, only tilt the machine on the side indicated in the engine manual, following the relevant instructions, making sure that the machine is perfectly stable before performing any interventions. On side discharge models, remove the discharge chute (if installed – see 3.1.d).
5) Do not drip petrol onto the plastic parts of the engine or the machine to prevent damaging them and remove all traces of spilled petrol immediately. The warranty does not cover damage to plastic parts caused by petrol.
6) To ensure that the machine will function properly over time, it is highly recommended to change the engine oil regularly, following the timing indicated in the engine's Instruction Manual. The oil can be discharged at a specialised servicing centre, or by using a syringe to suction the oil out through the filler spout, bearing in mind you may need to repeat the operation several times in order to completely empty the tank. **Remember to top-up with oil before using the machine again.**

4.1 Cutting means maintenance

All interventions on the cutting means must be done at a specialised Centre that has the most appropriate tools and equipment.
Only cutting means bearing the code indicated in the table on page ix must be used on this machine.
Given product evolution, the above mentioned cutting means may be replaced in time with others having similar interchangeable and operating safety features.

4.2 Adjusting the converter cable (if fitted)

This adjustment is necessary when the lever (1) tends not to remain in the «» position.
With the lever (1) in the «» position, turn the cable adjuster (2) in the direction indicated by the arrow as needed to ensure the lever remains in position.

IMPORTANT *The adjustment must be made when the engine is off.*

4.3 Battery recharging (where applicable)

- **Electric key ignition models**
  To recharge a flat battery, connect it to the battery charger (1) following the instructions in the battery maintenance manual.
  Do not connect the battery charger directly to the engine terminal. It is not possible to ignite the engine using the battery charger as a power source, as it may get damaged.
  If you do not use the lawnmower for a long period of time, disconnect the battery from the engine wiring,

making sure the charge level is good.

- **Electric push-button ignition models**

Read the engine instruction manual for instructions regarding autonomy, recharging, reinstating and maintenance of the battery.

The battery does not require charging in motors (3.2 b - V). It can only be charged with an external USB charging device (not supplied with the machine) in emergency situations. Follow the instructions provided in the engine manual.

4.4 Cleaning the interior

To clean the internal parts of the lawnmower:
– connect a water hose to its pipe fitting (1);
– lower the cutting height as far as possible;
– always stand behind the lawnmower handle;
– start the engine.

5. ATTACHMENTS

WARNING! ***For your safety, it is strictly prohibited to fit any other attachment other than those included in the following list, as they have been exclusively designed for the model and type of machine you are using.***

5.1 Mulching kit (unless provided with the equipment)

It chops the grass cuttings finely and leaves them on the lawn, instead of collecting them in the grass catcher.

6. DIAGNOSTICS

What to do if	
Problem description	Corrective Action
1. The petrol-driven lawnmower doesn't work	
No oil or fuel in the engine	Check the oil and petrol levels
The spark plug and filter are not in good condition	Clean the spark plug and filter which may be dirty or replace them
The lawnmower's fuel tank was not emptied at the end of the previous season	The float may be blocked; tilt the lawnmower on the carburettor side
2. The cut grass is not collected in the grass catcher	
The cutting means has received a knock	Have the cutting means sharpened or replace it. Check the fins that direct the grass towards the grass catcher
The inside of the chassis is dirty	Clean the inside of the chassis to ease the grass discharge towards the grass catcher
3. Mowing is difficult	
The cutting means is not in good condition	Have the cutting means sharpened or replace it
4. The machine starts to vibrate abnormally	
Damaged or loose parts	Stop the machine and disconnect the spark plug cable Inspect for damage Check for and tighten any loose parts Have all checks, repair work and replacements carried out by a specialized Centre only.

For any doubts or problems, please do not hesitate to contact your nearest Customer Service Centre or Your Dealer.

DICHIARAZIONE CE DI CONFORMITÁ (Istruzioni Originali)

(Direttiva Macchine 2006/42/CE, Allegato II, parte A)

1. **La Società**: ST. S.p.A. – Via del Lavoro, 6 – 31033 Castelfranco Veneto (TV) – Italy

2. Dichiara sotto la propria responsabilità, che la macchina: Tosaerba con conducente a piedi / taglio erba

   a) Tipo / Modello Base — MP1 504

   b) Mese/Anno di costruzione

   c) Matricola

   d) Motore — a scoppio

3. É conforme alle specifiche delle direttive:

   - MD: 2006/42/EC
     e) Ente Certificatore: /
     f) Esame CE del tipo: /

   - OND: 2000/14/EC, ANNEX VI - 2005/88/EC
     D. Lgs. 262/2002, ANNEX VI, proc. 1 (Italy)
     e) Ente Certificatore: N°0197 – TÜV Rheinland LGA Products GmbH
     Tillystrasse 2, 90431 Nürnberg – Germany

   - EMCD: 2014/30/EU
   - RoHS II: 2011/65/EU - 2015/863/EU

4. Riferimento alle Norme armonizzate:

   EN ISO 5395-1:2013+A1:2018
   EN ISO 5395-2:2013+A1:2016+A2:2017
   EN 50581:2012
   EN 55012:2007+A1:2009
   EN ISO 14982:2009

   g) Livello di potenza sonora misurato — 96 dB(A)
   h) Livello di potenza sonora garantito — 96 dB(A)
   i) Ampiezza di taglio — 48 cm

   n) Persona autorizzata a costituire il Fascicolo Tecnico:
   ST. S.p.A.
   Via del Lavoro, 6
   31033 Castelfranco Veneto (TV) - Italia

   o) Castelfranco V.to, 01.09.2019

   CEO Stiga Group
   Sean Robinson

EXAMPLE

DICHIARAZIONE CE DI CONFORMITÁ (Istruzioni Originali)

(Direttiva Macchine 2006/42/CE, Allegato II, parte A)

1. **La Società**: ST. S.p.A. – Via del Lavoro, 6 – 31033 Castelfranco Veneto (TV) – Italy

2. Dichiara sotto la propria responsabilità, che la macchina: Tosaerba con conducente a piedi / taglio erba

   a) Tipo / Modello Base — MP1 554

   b) Mese/Anno di costruzione

   c) Matricola

   d) Motore — a scoppio

3. É conforme alle specifiche delle direttive:

   - MD: 2006/42/EC
     e) Ente Certificatore: /
     f) Esame CE del tipo: /

   - OND: 2000/14/EC, ANNEX VI - 2005/88/EC
     D. Lgs. 262/2002, ANNEX VI, proc. 1 (Italy)
     e) Ente Certificatore: N°0197 – TÜV Rheinland LGA Products GmbH
     Tillystrasse 2, 90431 Nürnberg – Germany

   - EMCD: 2014/30/EU
   - RoHS II: 2011/65/EU - 2015/863/EU

4. Riferimento alle Norme armonizzate:

   EN ISO 5395-1:2013+A1:2018
   EN ISO 5395-2:2013+A1:2016+A2:2017
   EN 50581:2012
   EN 55012:2007+A1:2009
   EN ISO 14982:2009

   g) Livello di potenza sonora misurato — 98 dB(A)
   h) Livello di potenza sonora garantito — 98 dB(A)
   i) Ampiezza di taglio — 53 cm

   n) Persona autorizzata a costituire il Fascicolo Tecnico:
   ST. S.p.A.
   Via del Lavoro, 6
   31033 Castelfranco Veneto (TV) - Italia

   o) Castelfranco V.to, 01.09.2019

   CEO Stiga Group
   Sean Robinson

EXAMPLE

FR (Traduction de la notice originale)

Déclaration CE de Conformité
(Directive Machines 2006/42/CE, Annexe II, partie A)
1. La Société
2. Déclare sous sa propre responsabilité que la machine : Tondeuse à gazon à conducteur a pied / coupe du gazon
a) Type / Modèle de Base
b) Mois / Année de construction
c) Série
d) Moteur: moteur essence
3. Est conforme aux prescriptions des directives :
e) Organisme de certification
f) Examen CE du Type
4. Renvoi aux Normes harmonisées
g) Niveau de puissance sonore mesuré
h) Niveau de puissance sonore garanti
i) Largeur de coupe
n) Personne habilitée à établir le Dossier Technique :
o) Lieu et Date

EN (Translation of the original instruction)

EC Declaration of Conformity
(Machine Directive 2006/42/EC, Annex II, part A)
1. The Company
2. Herby declares under its own responsibility that the machine: Pedestrian controlled lawn mower / Grass cutting
a) Type / Base Model
b) Month / Year of manufacture
c) Serial number
d) Motor: petrol
3. Conforms to directive specifications:
e) Certifying body
f) EC examination of Type
4. Reference to harmonised Standards
g) Sound power level measured
h) Sound power level guaranteed
i) Range of cut
n) Person authorised to create the Technical Folder:
o) Place and Date

DE (Übersetzung der Originalbetriebsanleitung)

EG-Konformitätserklärung
(Maschinenrichtlinie 2006/42/EG, Anhang II, Teil A)
1. Die Gesellschaft
2. Erklärt auf eigene Verantwortung, dass die Maschine: Handgeführter Rasenmäher / Rasenschnitt
a) Typ / Basismodell
b) Monat / Baujahr
c) Seriennummer
d) Motor: Verbrennungsmotor
3. Den Anforderungen der folgenden Richtlinien entspricht:
e) Zertifizierungsstelle
f) EG-Baumusterprüfung
4. Bezugnahme auf die harmonisierten Normen
g) Gemessener Schallleistungspegel
h) Garantierter Schallleistungspegel
i) Schnittbreite
n) Zur Verfassung der technischen Unterlagen befugte Person:
o) Ort und Datum

NL (Vertaling van de oorspronkelijke gebruiksaanwijzing)

EG-verklaring van overeenstemming
(Richtlijn Machines 2006/42/CE, Bijlage II, deel A)
1. Het bedrijf
2. Verklaart onder zijn eigen verantwoordelijkheid dat de machine: Lopend bediende grasmaaier / grasmaaier
a) Type / Basismodel
b) Maand / Bouwjaar
c) Serienummer
d) Motor: benzinemotor
3. Voldoet aan de specificaties van de richtlijnen:
e) Certificatie-instituut
f) EG-onderzoek van het Type
4. Verwijzing naar de Geharmoniseerde normen
g) Gemeten niveau van geluidsvermogen
h) Gegarandeerd niveau van geluidsvermogen
i) Snijbreedte
n) Bevoegd persoon voor het opstellen van het Technisch Dossier
o) Plaats en Datum

ES (Traducción del Manual Original)

Declaración de Conformidad CE
(Directiva Máquinas 2006/42/CE, Anexo II, parte A)
1. La Empresa
2. Declara bajo su propia responsabilidad que la máquina: Cortadora de pasto con operador de pie / corte hierba
a) Tipo / Modelo Base
b) Mes / Año de fabricación
c) Matrícula
d) Motor: motor de explosión
3. Cumple con las especificaciones de las directivas:
e) Ente certificador
f) Examen CE del Tipo
4. Referencia a las Normas armonizadas
g) Nivel de potencia sonora medido
h) Nivel de potencia sonora garantizado
i) Amplitud de corte
n) Persona autorizada a realizar el Manual Técnico:
o) Lugar y Fecha

PT (Tradução do manual original)

Declaração CE de Conformidade
(Diretiva de Máquinas 2006/42/CE, Anexo II, parte A)
1. A Empresa
2. Declara sob a própria responsabilidade que a máquina: Corta-relvas para operador apeado / corte da relva
a) Tipo / Modelo Base
b) Mês / Ano de fabrico
c) Matrícula
d) Motor: motor a explosão
3. É conforme às especificações das diretivas:
e) Órgão certificador
f) Exame CE do Tipo
4. Referência às Normas harmonizadas
g) Nível medido de potência sonora
h) Nível garantido de potência sonora
i) Amplitude de corte
n) Pessoa autorizada a elaborar o Caderno Técnico
o) Local e Data

EL (Μετάφραση του πρωτοτύπου των οδηγιών χρήσης)

ΕΚ-Δήλωση συμμόρφωσης
(Οδηγία Μηχανών 2006/42/CE, Παράρτημα II, μέρος A)
1. Η Εταιρία
2. Δηλώνει υπεύθυνα ότι η μηχανή: Χλοοκοπτική μηχανή με όρθιο χειριστή / κοπή της χλόης
a) Τύπος / Βασικό Μοντέλο
b) Μήνας / Έτος κατασκευής
c) Αριθμός μητρώου
d) Κινητήρας: κινητήρας εσωτερικής ανάφλεξης
3. Συμμορφώνεται με τις προδιαγραφές της οδηγίας:
e) Οργανισμός πιστοποίησης
f) Εξέταση CE του Τύπου
4. Αναφορά στους Κανονισμούς εναρμόνισης
g) Στάθμη μέτρησης ακουστικής ισχύος
h) Στάθμη εγγυημένης ακουστικής ισχύος
i) Εύρος κοπής
n) Εξουσιοδοτημένο άτομο για την κατάρτιση του Τεχνικού Φυλλαδίου:
o) Τόπος και Χρόνος

TR (Orijinal Talimatların Tercümesi)

AT Uygunluk Beyanı
(2006/42/CE Makine Direktifi, Ek II, bölüm A)
1. Şirket
2. Şahsi sorumluluğu altında aşağıdaki makinenin: Ayak kumandalı çim biçme makinesi / çim kesimi
a) Tip / Standart model
b) Üretimin Ay / yıl
c) Sicil numarası
d) Motor: patlamalı motor
3. Aşağıdaki direktiflerin özelliklerine uygun olduğunu beyan etmektedir:
e) Sertifikalandıran kurum
f) ... Tipi CE incelemesi
4. Harmonize standartlara atıf
g) Ölçülen ses güç seviyesi
h) Garanti edilen ses güç seviyesi
i) Kesim genişliği
n) Teknik Dosyayı oluşturmaya yetkili kişi:
o) Yer ve Tarih

MK (Превод на оригиналните упатства)

Декларација за усогласеност со ЕУ
(Директива за машини 2006/42/CE, Анекс II, дел А)
1. Компанијата
2. изјавува со целосна лична одговорност дека следната машина: Тревокосачка со оператор на нозе / косење трева
а) Тип / основен модел
б) Месец / Година на производство
в) етикета
г) мотор: мотор со согорување
3. Усогласено со спецификациите според директивите:
д) тело за сертификација
ѓ) тест CE за типот
4. Референци за усогласени нормативи
е) Акустички притисок
ж) измерено ниво на звучна моќност
з) Ниво на гарантирана звучна моќност
н) овластено лице за составување на Техничката брошура
о) место и датум

NO (Oversettelse av orginal bruksanvisning)

EF- Samsvarserklæring
(Maskindirektiv 2006/42/EF, Vedlegg II, del A)
1. Firmaet
2. Erklærer på eget ansvar at maskinen: Håndført gressklipper/ gressklipping
a) Type / Modell
b) Måned / Byggeår
c) Serienummer
d) Motor: forbrenningsmotor
3. Oppfyller kravene i direktivene:
e) Sertifiseringsorgan
f) EF-typeprøving
4. Henvisning til harmoniserte standarder
g) Målt lydeffektnivå
h) Garantert lydeffektnivå
i) Klippebredde
n) Person som har fullmakt til å utferdige teknisk dokumentasjon:
o) Sted og dato

SV (Översättning av bruksanvisning i original)

EG-försäkran om överensstämmelse
(Maskindirektiv 2006/42//EG, bilaga II, de la)
1. Företaget
2. Försäkrar på eget ansvar att maskinen: Förarledd gräsklippare / gräsklippning
a) Typ / Basmodell
b) Månad / Tillverkningsår
c) Serienummer
d) Motor: förbränningsmotor
3. Överensstämmer med föreskrifterna i direktivet
e) Intygsorgan_ Anmält organ
f) EG typgodkännande
4. Referens till harmoniserade standarder
g) Uppmätt ljudeffektnivå
h) Garanterad ljudeffektnivå
i) Skärbredd
n) Auktoriserad person för upprättandet av den tekniska dokumentationen:
o) Ort och datum

DA (Oversættelse af den originale brugsanvisning)

EF-overensstemmelseserklæring
(Maskindirektiv 2006/42/EF, bilag II, del A)
1. Firmaet
2. Erklærer på eget ansvar, at maskinen: Plæneklipper betjent af gående personer / klipning af græsset
a) Type / Model
b) Måned / Konstruktionsår
c) Serienummer
d) Motor: forbrændingsmotor
3. Er i overensstemmelse med specifikationerne ifølge direktiverne:
e) Certificeringsorgan
f) EF-typeafprøvning
4. Henvisning til harmoniserede standarder
g) Målt lydeffektniveau
h) Garanteret lydeffektniveau
i) Klippebredde
n) Person, der har bemyndigelse til at udarbejde det tekniske dossier:
o) Sted og dato

FI (Alkuperäisten ohjeiden käännös)

EY-VAATIMUSTENMUKAISUUSVAKUUTUS
(Konedirektiivi 2006/42/EY, Liite II, osa A)
1. Yritys
2. Vakuuttaa omalla vastuullaan, että kone: Kävellen ohjattava ruohonleikkuri/ ruohonleikkuu
a) Tyyppi / Perusmalli
b) Kuukausi /Valmistusvuosi
c) Sarjanumero
d) Moottori : räjähdysmoottori
3. On yhdenmukainen seuraavien direktiivien asettamien vaatimusten kanssa:
e) Sertifiointiyritys
f) EY-tyyppitarkastus
4. Viittaus harmonisoituihin standardeihin
g) Mitattu äänitehotaso
h) Taattu äänitehotaso
i) Leikkuuleveys
n) Teknisten asiakirjojen laatimiseen valtuutettu henkilö:
o) Paikka ja päivämäärä

CS (Překlad původního návodu k používání)

ES – Prohlášení o shodě
(Směrnice o Strojních zařízeních 2006/42/ES, Příloha II, část A)
1. Společnost
2. Prohlašuje na vlastní odpovědnost, že stroj: Sekačka se stojící obsluhou / sekačka na trávu
a) Typ / Základní model
b) Měsíc / Rok výroby
c) Výrobní číslo
d) Motor: spalovací motor
3. Je ve shodě s nařízeními směrnic:
e) Certifikační orgán
f) ES zkouška Typu
4. Odkazy na Harmonizované normy
g) Naměřená úroveň akustického výkonu
h) Zaručená úroveň akustického výkonu
i) Šířka řezání
n) Osoba autorizovaná pro vytvoření Technického spisu:
o) Místo a Datum

PL (Tłumaczenie instrukcji oryginalnej)

Deklaracja zgodności WE
(Dyrektywa maszynowa 2006/42/WE, Załącznik II, część A)
1. Spółka
2. Oświadcza na własną odpowiedzialność, że maszyna: Kosiarka prowadzona przez operatora pieszego / cięcie trawy
a) Typ / Model podstawowy
b) Miesiąc / Rok produkcji
c) Numer seryjny
d) Silnik: silnik o zapłonie iskrowym
3. Spełnia podstawowe wymogi następujących Dyrektyw:
e) Jednostka certyfikująca
f) Badanie typu WE
4. Odniesienie do Norm zharmonizowanych
g) Zmierzony poziom mocy akustycznej
h) Gwarantowany poziom mocy akustycznej
i) Szerokość cięcia
n) Osoba upoważniona do zredagowania Dokumentacji technicznej:
o) Miejscowość i data

HU (Eredeti használati utasítás fordítása)

EK-megfelelőségi nyilatkozata
(2006/42/EK gépirányelv, II. melléklet "A" rész)
1. Alulírott Vállalat
2. Felelősségének teljes tudatában kijelenti, hogy az alábbi gép:
a) Típus / Alaptípus
b) Hónap / Gyártás éve
c) Gyártási szám
d) Motor: robbanómotor
3. Megfelel az alábbi irányelvek előírásainak:
e) Tanúsító szerv
f) CE vizsgálat típusa
4. Hivatkozás a harmonizált szabványokra
g) Mért zajteljesítmény szint
h) Garantált zajteljesítmény szint
i) Vágási szélesség
n) Műszaki Dosszié szerkesztésére felhatalmazott személy:
o) Helye és ideje

RU (Перевод оригинальных инструкций)

Декларация соответствия нормам ЕС
(Директива о машинном оборудовании 2006/42/ЕС, Приложение II, часть А)
1. Предприятие
2. Заявляет под собственную ответственность, что машина:
а) Тип / Базовая модель
b) Месяц /Год изготовления
c) Паспорт
d) Двигатель: двигатель внутреннего сгорания
3. Соответствует требованиям следующих директив:
e) Сертифицирующий орган
f) Испытание ЕС типового образца
4. Ссылки на гармонизированные нормы
g) Измеренный уровень звуковой мощности
h) Гарантируемый уровень звуковой мощности
i) Амплитуда кошения
n) Лицо, уполномоченное на подготовку технической документации:
o) Место и дата

HR (Prijevod originalnih uputa)

EK Izjava o sukladnosti
(Direktiva 2006/42/EZ o strojevima, dodatak II, dio A)
1. Tvrtka:
2. pod vlastitom odgovornošću izjavljuje da je stroj:
a) Vrsta / Osnovni model
b) Mjesec / Godina proizvodnje
c) Matični broj
d) Motor: motor s unutarnjim izgaranjem
3. sukladan s temeljnim zahtjevima direktiva:
e) Certifikacijsko tijelo
f) Tipsko ispitivanje EZ
4. Primijenjene su slijedeće harmonizirane norme:
g) Izmjerena razina zvučne snage
h) Zajamčena razina zvučne snage
i) Širina rezanja
n) Osoba ovlaštena za pravljenje Tehničke datoteke:
o) Mjesto i datum

SL (Prevod izvirnih navodil)

ES izjava o skladnosti
(Direktiva 2006/42/ES) , priloga II, del A)
1. Družba
2. pod lastno odgovornostjo izjavlja, da je stroj: Kosilnica za stoječega delavca / košnja trave
a) Tip / osnovni model
b) Mesec /Leto izdelave
c) Serijska številka
d) Motor: motor z notranjim izgorevanjem
3. Skladen je z določili direktiv :
e) Ustanova, ki izda potrdilo
f) ES pregled tipa
4. Sklicevanje na usklajene predpise
g) Izmerjen nivo zvočne moči
h) Zagotovljen nivo zvočne moči
i) Obseg košnje
n) Oseba, pooblaščena za sestavo tehnične knjižice:
o) Kraj in datum

BS (Prijevod originalnih uputa)

EZ izjava o sukladnosti
(Direktiva o mašinama 2006/42/EZ, Prilog II, deo A)
1. Firma
2. Daje izjavu pod vlastitom odgovornošću da je mašina: Kosilica na guranje / Košenje trave
a) Tip / Osnovni model
b) Mjesec / Godina proizvodnje
c) Serijski broj
d) Motor: motor s unutrašnjim izgaranjem
3. sukladna s osnovnim zahtjevima direktive:
e) Certifikaciono tijelo
f) EZ ispitivanje tipa
4. Pozivanje na usklađene norme
g) Izmjereni nivo zvučne snage
h) Garantovani nivo zvučne snage
i) Širina košenja
n) Osoba ovlaštena za izradu tehničke brošure:
o) Mjesto i datum

SK (Preklad pôvodného návodu na použitie)

ES vyhlásenie o zhode
(Smernica o Strojných zariadeniach 2006/42/ES, Príloha II, časť A)
1. Spoločnosť
2. Vyhlasuje na vlastnú zodpovednosť, že stroj: Kosačka so stojacou obsluhou / kosačka na trávu
a) Typ / Základný model
b) Mesiac / Rok výroby
c) Výrobné číslo
d) Motor: spaľovací motor
3. Je v zhode s nariadeniami smerníc:
e) Certifikačný orgán
f) Skúška typu ES
4. Odkaz na Harmonizované normy
g) Nameraná úroveň akustického výkonu
h) Zaručená úroveň akustického výkonu
i) Šírka kosenia
j) Čistý inštalovaný výkon
n) Osoba autorizovaná na vytvorenie Technického spisu:
o) Miesto a Dátum

RO (Traducerea manualului fabricantului)

CE -Declaratie de Conformitate
(Directiva Maşini 2006/42/CE, Anexa II, partea A)
1. Societatea
2. Declară pe propria răspundere că maşina: Maşină de tuns iarba cu conducător pedestru / tăiat iarba
a) Tip / Model de bază
b) Luna /Anul de fabricație
c) Număr de serie
d) Motor: motor cu combustie
3. Este în conformitate cu specificaţiile directivelor:
e) Organism de certificare
f) Examinare CE de Tip
4. Referinţă la Standardele armonizate
g) Nivel de putere sonoră măsurat
h) Nivel de putere sonoră garantat
i) Lăţimea de tăiere
n) Persoană autorizată să întocmească Dosarul Tehnic
o) Locul şi Data

LT (Originalių instrukcijų vertimas)

EB atitikties deklaracija
(Mašinų direktyva 2006/42/CE, Priedas II, dalis A)
1. Bendrovė
2. Prisiima atsakomybę, kad įrenginys: Pėsčio operatoriaus valdoma vejapjovė/ žolės pjovimas
a) Tipas / Bazinis Modelis
b) Mėnuo / Pagaminimo metai
c) Serijos numeris
d) Variklis: vidaus degimo variklis
3. Atitinka direktyvose pateiktas specifikacijas:
e) Sertifikavimo įstaiga
f) CE tipo tyrimas
4. Nuoroda į suderintas Normas
g) Išmatuotas garso galios lygis
h) Užtikrinamas garso galios lygis
i) Pjovimo plotis
n) Autorizuotas asmuo sudaryti Techninę Dokumentaciją:
o) Vieta ir Data

LV (Instrukciju tulkojums no oriģinālvalodas)

EK atbilstības deklarācija
(Direktīva 2006/42/EK par mašīnām, pielikums II, daļa A)
1. Uzņēmums
2. Uzņemoties par to pilnu atbildību, paziņo, ka mašīna: Pėsčio operatoriaus valdoma vejapjovė/ zāles pļaušana
a) Tips / Bāzes modelis
b) Mēnesis / Ražošanas gads
c) Sērijas numurs
d) Motors: iekšdedzes motors
3. Atbilst šādu direktīvu prasībām:
e) Sertifikācijas iestāde
f) CE tipveida pārbaude
4. Atsauce uz harmonizētiem standartiem
g) Izmērītais skaņas intensitātes līmenis
h) Garantētais skaņas intensitātes līmenis
i) Pļaušanas platums
n) Pilnvarotais darbinieks, kas sagatavoja tehnisko dokumentāciju:
o) Vieta un datums

SR (Prevod originalnih uputstval)

EC deklaracija o usaglašenosti
(Direktiva o mašinama 2006/42/EC, Prilog II, deo A)
1. Preduzeće
2. Daje izjavu pod vlastitom odgovornošću da je mašina:
a) Tip / Osnovni model
b) Mesec /Godina proizvodnje
c) Serijski broj
d) Motor: motor s unutrašnjim sagorevanjem
3. u skladu s osnovnim zahtevima direktiva:
e) Sertifikaciono telo
f) EC ispitivanje tipa:
4. Pozivanje na usklađene norme
g) Izmereni nivo zvučne snage
h) Garantovani nivo zvučne snage
i) Širina košenja.....................
n) Osoba ovlašćena za sastavljanje tehničke brošure
o) Mesto i datum

BG (Превод на оригиналните инструкции)

ЕО декларация за съответствие
(Директива Машини 2006/42/ЕО, Приложение II, част А)
1. Дружеството
2. На собствена отговорност декларира, че машината: Косачка с изправен водач / рязане на трева
а) Вид / Базисен модел
б) Месец / година на производство
в) Сериен номер
г) Мотор: мотор с вътрешно горене
3. Е в съответствие със спецификата на директивите:
д) Сертифициращ орган
е) ЕО изследване на вида
4. Базирано на хармонизираните норми
ж) Ниво на измерена акустична мощност
и) Гарантирано ниво на акустична мощност
й) Широчина на косене
р) Лице, упълномощено да състави Техническата Документация:
о) Място и дата

ET (Algupärase kasutusjuhendi tõlge)

EÜ vastavusdeklaratsioon
(Masinadirektiiv 2006/42/EÜ, Lisa II, osa A)
1. Firma
2. Kinnitab omal vastutusel, et masin: Seisva juhiga muruniitja / muruniitja
a) Tüüp / Põhimudel
b) Kuu aega / Tootmisaasta
c) Matrikkel
d) Mootor: Sisepõlemismootor
3. Vastab direktiivide nõuetele:
e) Kinnitav asutus
f) EÜ tüübihindamine
4. Viide ühtlustatud standarditele
g) Mõõdetud helivõimsuse tase
h) Garanteeritud helivõimsuse tase
i) Lõikelaius
n) Tehnilise Lehe autoriseeritud koostaja:
o) Koht ja Kuupäev

EXAMPLE

© by ST. S.p.A.

IT • Il contenuto e le immagini del presente manuale d'uso sono stati realizzati per conto di ST. S.p.A. e sono tutelati da diritto d'autore – E' vietata ogni riproduzione o alterazione anche parziale non autorizzata del documento.
BG • Съдържанието и изображенията в настоящото ръководство са извършени за ST. S.p.A. и са защитени с авторски права – Забранява се всяко неоторизирано възпроизвеждане или промяна, дори и отчасти на документа.
BS • Sadržaj i slike iz ovog korisničkog priručnika napravljeni su isključivo za ST. S.p.A. i zaštićeni su autorskim pravima – zabranjena je svaka neovlaštena reprodukcija ili izmjena dokumenta, djelomično ili u potpunosti.
CS • Obsah a obrázky v tomto návodu k použití byly zpracovány jménem společnosti ST. S.p.A. a jsou chráněny autorským právem – Reprodukce či nepovolené pozměňování tohoto dokumentu, a to i částečné, je zakázáno.
DA • Indhold og illustrationer i denne vejledning er blevet skabt på vegne af ST. S.p.A. og er beskyttet af ophavsret – Enhver gengivelse eller ændring, også delvis, af dokumentet uden autorisation hertil er forbudt.
DE • Inhalt und Bilder dieser Bedienungsanleitung wurden im Namen von ST. S.p.A. erstellt und sind urheberrechtlich geschützt – Jede nicht genehmigte Vervielfältigung oder Veränderung, auch auszugsweise, dieses Dokuments ist verboten.
EL • Το περιεχόμενο και οι εικόνες στο παρόν εγχειρίδιο χρήσης δημιουργήθηκαν για λογαριασμό της εταιρείας ST. S.p.A. και προστατεύονται από πνευματικά δικαιώματα – Απαγορεύεται οποιαδήποτε αναπαραγωγή ή τροποποίηση, έστω και μερική, του εγγράφου χωρίς έγκριση.
EN • The content and images in this User Manual were produced expressly for ST. S.p.A. and are protected by copyright – any unauthorised reproduction or modification to the document, either partially or in full, is prohibited.
ES • El contenido y las imágenes del presente manual de uso han sido creados por ST. S.p.A. y están protegidos por los derechos de autor – Se prohíbe toda reproducción o modificación, incluso parcial, no autorizada del documento.
ET • Käesoleva kasutusjuhendi sisu ja kujutised on toodetud konkreetselt ettevõttele ST. S.p.A. ja neile rakendub autorikaitseseadus – dokumendi igasugune osaline või täielik ilma loata reprodutseerimine või muutmine on keelatud.
FI • Tämän käyttöoppaan sisältö ja kuvat on valmistettu ST. S.p.A. -yhtiön toimesta ja niitä suojaa tekijänoikeuslaki. – Asiakirjan kaikenlainen kopioiminen tai muuttaminen, osittainkin, on kielletty ilman erityistä lupaa.
FR • Le contenu et les images du présent manuel d'utilisation ont été réalisés pour le compte de ST. S.p.A. et sont protégés par un droit d'auteur - Toute reproduction ou modification non autorisée, même partielle, du document, est interdite.
HR • Sadržaj i slike u ovom priručniku za uporabu izrađeni su za tvrtku ST. S.p.A. te su obuhvaćeni autorskim pravima – Zabranjuje se neovlašteno umnožavanje ili prilagodba, djelomična ili u cijelosti, ovog dokumenta.
HU • Ennek a használati útmutatónak a tartalma és a benne szereplő képek kizárólag a ST. S.p.A. számára készültek és szerzői joggal védettek – tilos a dokumentum bármely részének vagy egészének engedély nélküli sokszorosítása és módosítása.
LT • Šio naudotojo vadovo turinys ir paveikslėliai skirti tik „ST. S.p.A." ir yra saugomi autorių teisėmis – dokumentą atgaminti ar modifikuoti, visiškai arba iš dalies, yra draudžiama.
LV • Šīs lietotāja rokasgrāmatas saturs un attēli ir veidoti tikai ST. S.p.A. un ir aizsargāti ar autortiesībām. Jebkāda dokumenta vai tā daļas prettiesiska kopēšana vai pārveide ir stingri aizliegta.
MK • Содржината и сликите во Упатството за корисникот се подготвени исклучиво за ST. S.p.A. и се заштитени со авторски права – забрането е секое делумно или целосно неовластено репродуцирање или измена на документот.
NL • De inhoud en de afbeeldingen van deze gebruikshandleiding werden gerealiseerd voor rekening van ST. S.p.A. en zijn beschermd door het auteursrecht – Elke niet-geautoriseerde reproductie of wijziging, ook gedeeltelijke, van het document is verboden.
NO • Innholdet og bildene i denne brukerveiledningen er utført på oppdrag fra ST. S.p.A. og er beskyttet ved opphavsrett - Enhver gjengivelse eller endring, selv kun delvis, er forbudt.
PL • Treść oraz ilustracje zawarte w niniejszej instrukcji obsługi powstały na zlecenie spółki ST. S.p.A. i są chronione prawami autorskimi – Zabrania się wszelkiego kopiowania bądź modyfikowania, także częściowego, niniejszego dokumentu bez uzyskania stosownej zgody.
PT • As imagens e os conteúdos contidos no presente Manual do Utilizador foram expressamente criados para uso exclusivo da ST. S.p.A., encontrando-se protegidos por direitos de autor. Qualquer tipo de reprodução ou alteração, parcial ou integral, não autorizadas deste Manual estão expressamente proibidas.
RO • Conținutul și imaginile din manualul de utilizare de față au fost realizate în numele ST. S.p.A. și sunt protejate de drepturi de autor – Este interzisă orice reproducere sau modificare chiar și parțială neautorizată a documentului.
RU • Тесты и изображения, содержащиеся в настоящем руководстве, были созданы в интересах ST. S.p.A. и защищены авторскими правами – Любое несанкционированное воспроизведение или изменение документа запрещено.
SK • Obsah a obrázky v tomto návode na používanie boli spracované menom spoločnosti ST. S.p.A. a sú chránené autorským právom – Reprodukcie či nepovolené pozmeňovanie tohto dokumentu, a to aj čiastočné, je zakázané.
SL • Vsebine in slike v tem uporabniškem priročniku so izdelane za podjetje ST. S.p.A. in so zaščitene z avtorskimi pravicami – vsakršno nepooblaščeno razmnoževanje ali spreminjanje dokumenta, v celoti ali delno, je prepovedano.
SR • Sadržaj i slike ovog priručnika za upotrebu su napravljeni u ime ST. S.p.A. i zaštićeni su autorskim pravima – Zabranjena je svaka potpuna ili delimična reprodukcija ili izmena dokumenta bez odobrenja.
SV • Innehållet och bilderna i denna användarhandbok har framställts för ST. S.p.A. och skyddas av upphovsrätt – all form av reproduktion eller ändring, även partiell, som inte auktoriserats är förbjuden.
TR • Bu Kullanıcı Kılavuzundaki içerik ve resimler açıkça ST. S.p.A. için üretilmiştir ve telif hakkı ile korunmaktadır – dokümanın izinsiz olarak tamamen ya da kısmen herhangi bir şekilde çoğaltılması ya da değiştirilmesi yasaktır.

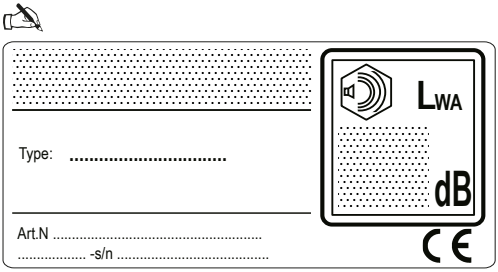

ST. S.p.A.
Via del Lavoro, 6
31033 Castelfranco Veneto (TV) ITALY