171506798/1 01/2021

LT 20 Li S
LT 20 Li A

IT **Tagliaerba/tagliabordi con alimentazione a batteria portatile**
MANUALE DI ISTRUZIONI

ATTENZIONE: prima di usare la macchina, leggere attentamente il presente libretto.

BG **тревен тример/тример с преносима акумулаторна батерия**
УПЪТВАНЕ ЗА УПОТРЕБА

ВНИМАНИЕ: преди да използвате машината прочетете внимателно настоящата книжка.

BS **Ručna kosilica/trimer makaze na bateriju**
UPUTSTVO ZA UPOTREBU

PAŽNJA: prije nego što koristite ovu mašinu, pažljivo pročitajte priručnik s uputama.

CS **Přenosný akumulátorový vyžínač/ořezávač okrajů trávníku**
NÁVOD K POUŽITÍ

UPOZORNĚNÍ: před použitím stroje si pozorně přečtěte tento návod k použití.

DA **Bærbar batteridreven græstrimmer/kantklipper**
BRUGSANVISNING

ADVARSEL: læs instruktionsbogen omhyggeligt igennem, før du tager denne maskine i brug.

DE **Handgehaltener batteriebetriebener Rasentrimmer/Rasenkantenschneider**
GEBRAUCHSANWEISUNG

ACHTUNG: Vor Inbetriebnahme des Geräts die Gebrauchsanleitung aufmerksam lesen.

EL **φορητό χλοοκοπτικό / κόφτης άκρων μπαταρίας**
ΟΔΗΓΙΕΣ ΧΡΗΣΠΣ

ΠΡΟΣΟΧΗ: πριν χρησιμοποιησετε το μηχανημα, διαβαστε προσεκτικα το παρον εγχειριδιο.

EN **Battery powered hand-held lawn trimmer / edge trimmer**
OPERATOR'S MANUAL

WARNING: read thoroughly the instruction booklet before using the machine.

ES **Cortacésped/cortabordes con alimentación por batería portátil**
MANUAL DE INSTRUCCIONES

ATENCIÓN: antes de utilizar la máquina, leer atentamente el presente manual.

ET **Kaasaskantav akutoitega murulõikur/äärelõikur**
KASUTUSJUHEND

TÄHELEPANU: enne masina kasutamist lugeda tähelepanelikult antud kasutusjuhendit.

FI **Käsin kannateltava akkukäyttöinen nurmikonleikkuri/nurmikon reunojen viimeistelyleikkuri**
KÄYTTÖOHJEET

VAROITUS: lue käyttöopas huolellisesti ennen koneen käyttöä.

FR **Coupe-herbe/coupe-bordures portatif alimenté par batterie**
MANUEL D'UTILISATION

ATTENTION: lire attentivement le manuel avant d'utiliser cette machine.

HR **Prijenosni šišač trave/šišač travnih rubova s baterijskim napajanjem**
PRIRUČNIK ZA UPORABU

POZOR: prije uporabe stroja, pažljivo pročitajte ovaj priručnik.

HU **Hordozható akkumulátoros fűnyíró/szegélynyíró**
HASZNÁLATI UTASÍTÁS

FIGYELEM! a gép használata előtt olvassa el figyelmesen a jelen kézikönyvet.

LT **Rankinė akumuliatorinė vejapjovė -trimeris vejos kraštams**
NAUDOJIMO INSTRUKCIJOS

DĖMESIO: prieš naudojant įrenginį, atidžiai perskaityti šį naudotojo vadovą.

LV **Ar bateriju darbināma rokā turama zālienu pļaujmašīna / zālienu apmalu pļaujmašīna**
LIETOŠANAS INSTRUKCIJA

UZMANĪBU: pirms aparāta lietošanai rūpīgi izlasiet doto instrukciju.

MK **Преносна тревокосачка/поткаструвач на батерии**
УПАТСТВА ЗА УПОТРЕБА

ВНИМАНИЕ: прочитајте го внимателно ова упатство пред да ја користите машината.

NL **Draagbare grasmaaier/graskantenrijder met accuvoeding**
GEBRUIKERSHANDLEIDING

LET OP: vooraleer de machine te gebruiken, dient men deze handleiding aandachtig te lezen.

NO **Bærbar batteridrevet plen- og kanttrimmer**
INSTRUKSJONSBOK

ADVARSEL: les denne bruksanvisningen nøye før du bruker maskinen.

PL **Przenośna podcinarka/przycinarka elektryczna akumulatorowa**
INSTRUKCJE OBSŁUGI

OSTRZEŻENIE: przed użyciem maszyny, należy uważnie przeczytać niniejszą instrukcję.

PT **Aparador de relva/aparador de canto alimentado a bateria**
MANUAL DE INSTRUÇÕES

ATENÇÃO: antes de usar a máquina, leia atentamente o presente manual.

RO **Maşină de tuns iarba/maşină de tuns margini de gazon alimentate cu baterie portabilă**
MANUAL DE INSTRUCȚIUNI

ATENȚIE: înainte de a utiliza maşina, citiți cu atenție manualul de față.

RU **Портативная газонокосилка / триммер для краев газона с батарейным питанием**
РУКОВОДСТВО ПО ЭКСПЛУАТАЦИИ

ВНИМАНИЕ: прежде чем пользоваться оборудованием, внимательно прочтите зто руководство по зксплуатации.

SK **Prenosný akumulátorový vyžínač/orezávač okrajov trávnika**
NÁVOD NA POUŽITIE

UPOZORNENIE: pred použitím stroja si pozorne prečítajte tento návod.

SL **Prenosni akumulatorski obrezovalnik trat / tratnih robov**
PRIROČNIK ZA UPORABO

POZOR: preden uporabite stroj, pazljivo preberite priročnik z navodili.

SR **Ručna kosačica/trimer makaze na bateriju**
PRIRUČNIK SA UPUTSTVIMA

PAŽNJA: pre korišćenja mašine pažljivo pročitati ovaj priručnik.

SV **Batteridriven bärbar gräsklippare/kantskärare**
BRUKSANVISNING

VARNING: läs igenom hela detta häfte innan du använder maskinen.

TR **Batarya beslemeli elde taşınabilir çim/kenar kesme makinesi**
KULLANIM KILAVUZU

DİKKAT: makıneyı kullanmadan önce talımatlar ıçeren kilavuzu dıkkatle okuyun.

ITALIANO - **Istruzioni Originali** ..... IT
БЪЛГАРСКИ - Превод на оригиналните инструкции ..... BG
BOSANSKI - Prijevod originalnih uputa ..... BS
ČESKY - Překlad původního návodu k používání ..... CS
DANSK - Oversættelse af den originale brugsanvisning ..... DA
DEUTSCH - Übersetzung der Originalbetriebsanleitung ..... DE
ΕΛΛΗΝΙΚΑ - Μετάφραση του πρωτοτύπου των οδηγιών χρήσης ..... EL
ENGLISH - Translation of the original instruction ..... EN
ESPAÑOL - Traducción del Manual Original ..... ES
EESTI - Algupärase kasutusjuhendi tõlge ..... ET
SUOMI - Alkuperäisten ohjeiden käännös ..... FI
FRANÇAIS - Traduction de la notice originale ..... FR
HRVATSKI - Prijevod originalnih uputa ..... HR
MAGYAR - Eredeti használati utasítás fordítása ..... HU
LIETUVIŠKAI - Originalių instrukcijų vertimas ..... LT
LATVIEŠU - Instrukciju tulkojums no oriģinālvalodas LV
МАКЕДОНСКИ -Превод на оригиналните упатства ..... MK
NEDERLANDS - Vertaling van de oorspronkelijke gebruiksaanwijzing ..... NL
NORSK - Oversettelse av orginal bruksanvisning ..... NO
POLSKI - Tłumaczenie instrukcji oryginalnej ..... PL
PORTUGUÊS - Tradução do manual original ..... PT
ROMÂN - Traducerea manualului fabricantului ..... RO
РУССКИЙ - Перевод оригинальных инструкций ..... RU
SLOVENŠČINA - Prevod izvirnih navodil ..... SL
SLOVENSKY - Preklad pôvodného návodu na použitie ..... SK
SRPSKI - Prevod originalnih uputstva ..... SR
SVENSKA - Översättning av bruksanvisning i original ..... SV
TÜRKÇE - Orijinal Talimatların Tercümesi ..... TR

1

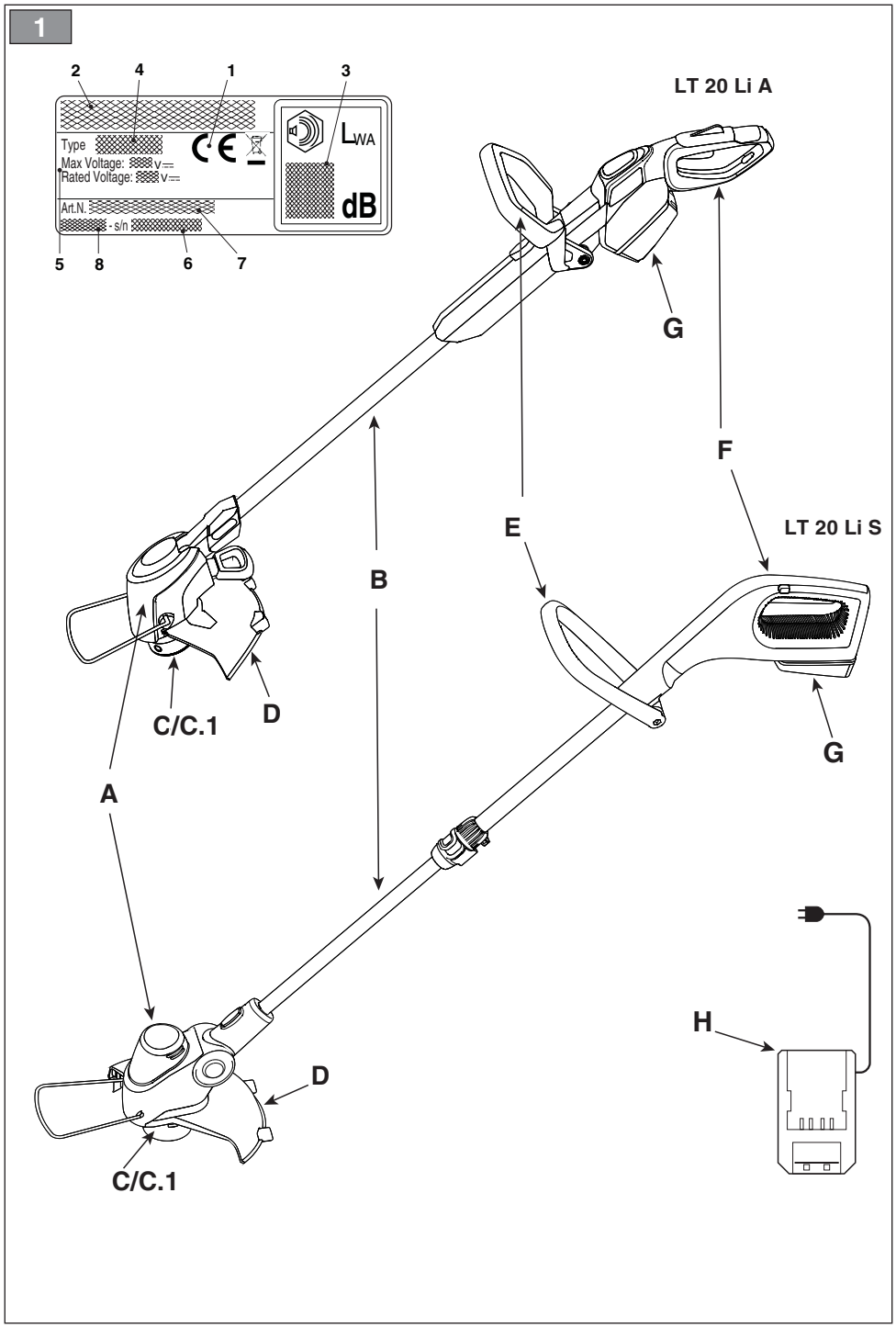
2
4
1
3
Type
Max Voltage: V
Rated Voltage: V
Art.N.
- s/n
LWA
dB
5
8
6
7
LT 20 Li A
G
F
E
LT 20 Li S
B
C/C.1
D
G
A
H
D
C/C.1

2

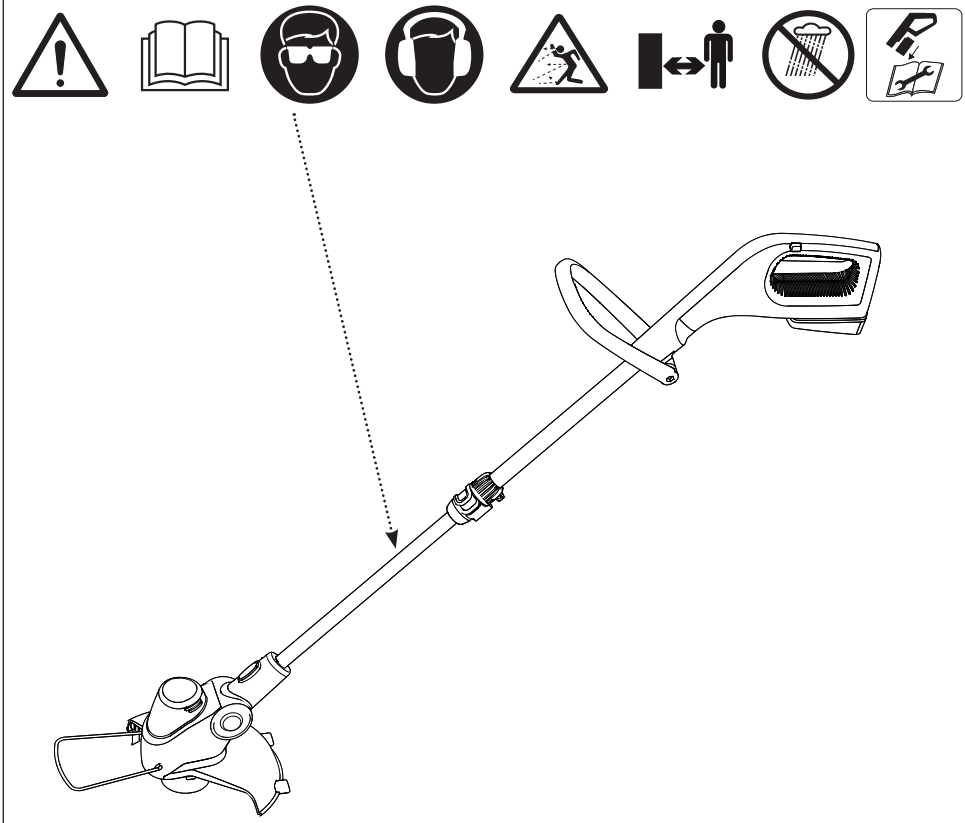

3

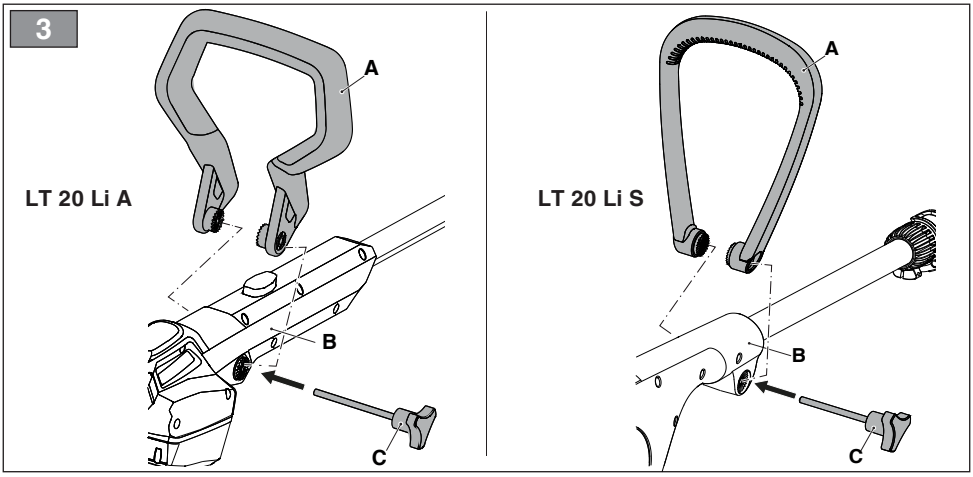

4

LT 20 Li A

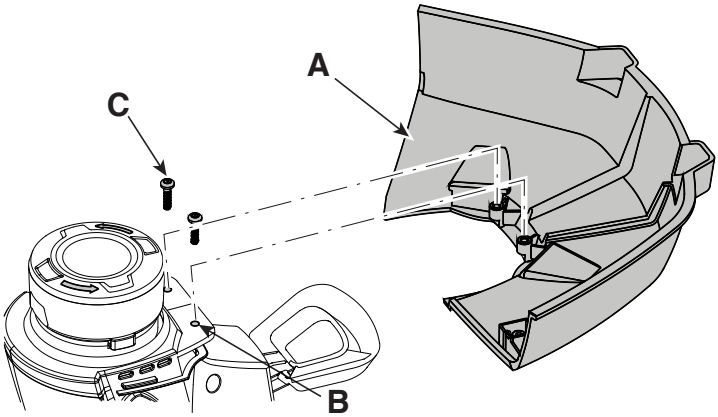

LT 20 Li S

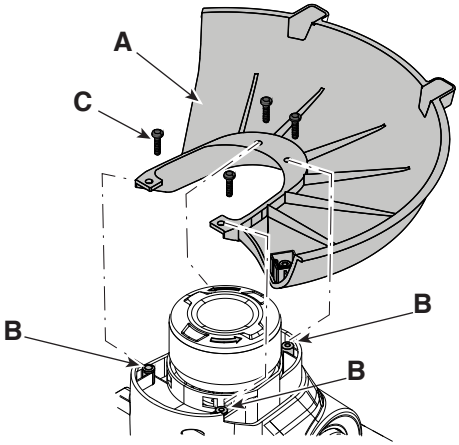

5

LT 20 Li A

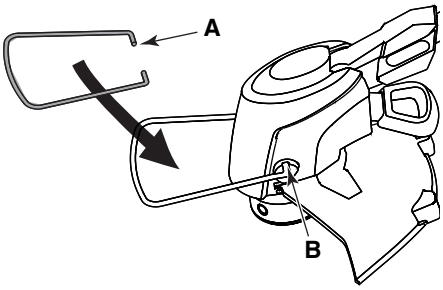

LT 20 Li S

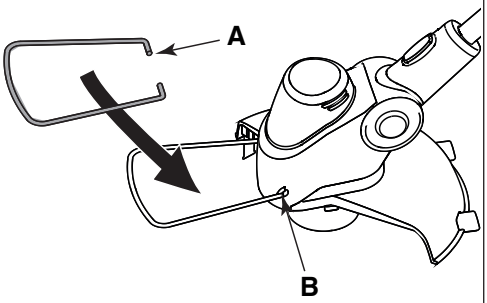

6

LT 20 Li A

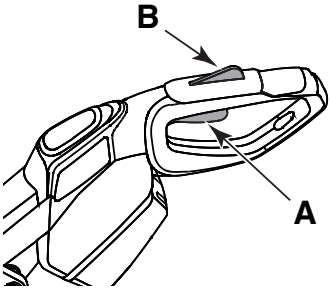

LT 20 Li S

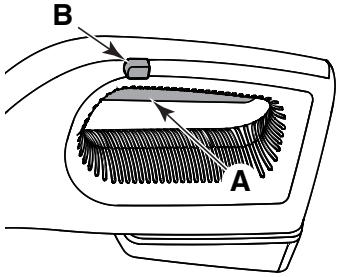

7

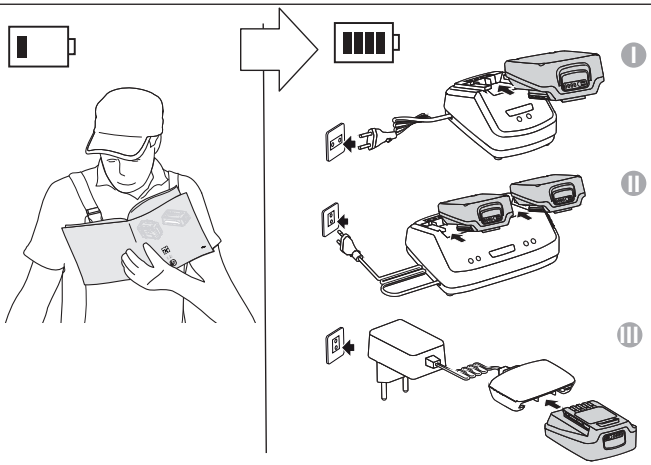

8

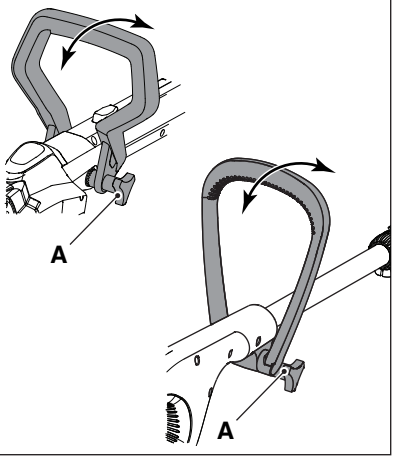

9

LT 20 Li A

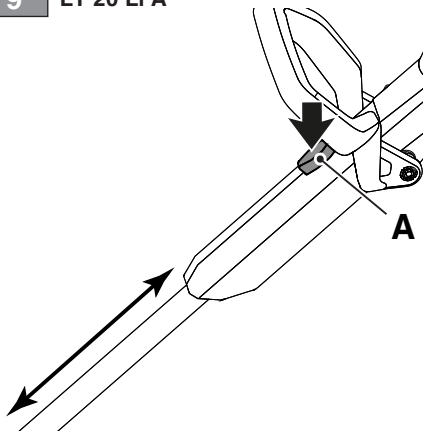

10 LT 20 Li S

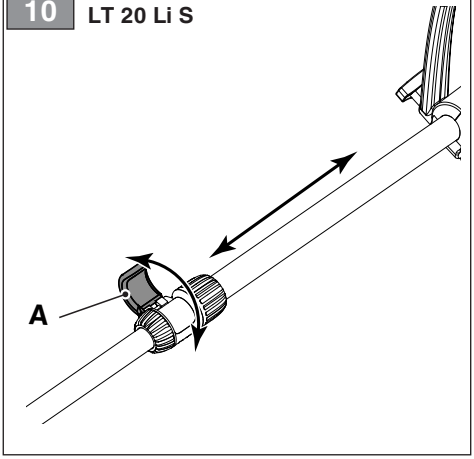

11 LT 20 Li A

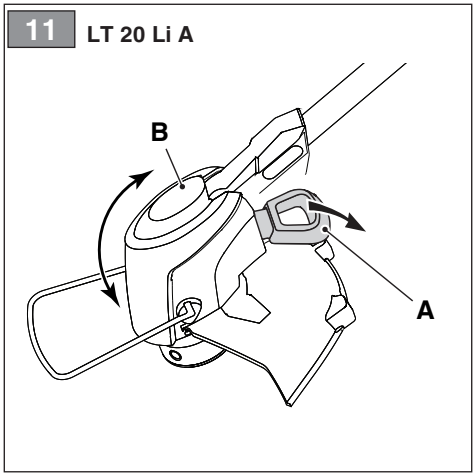

12 LT 20 Li S

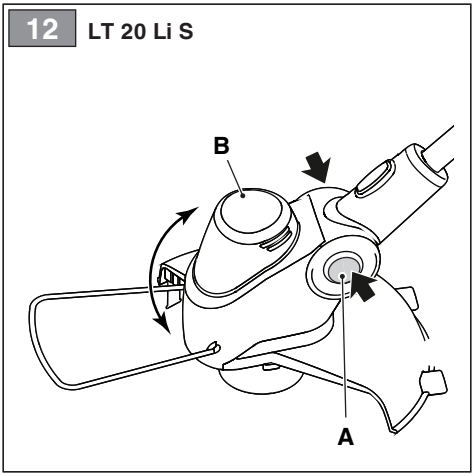

13 LT 20 Li S

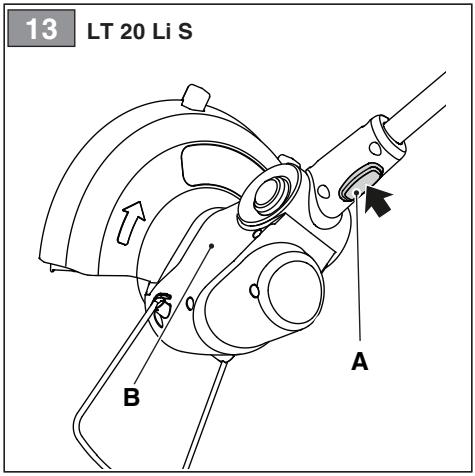

14

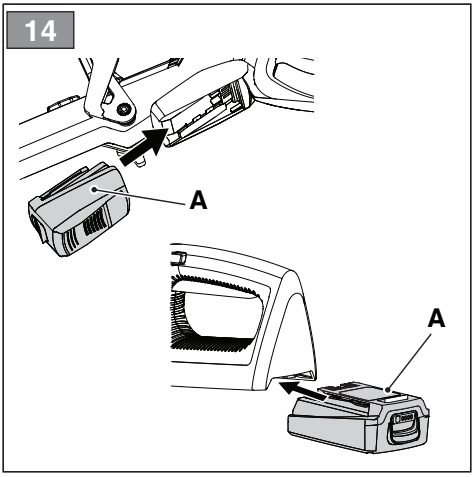

15

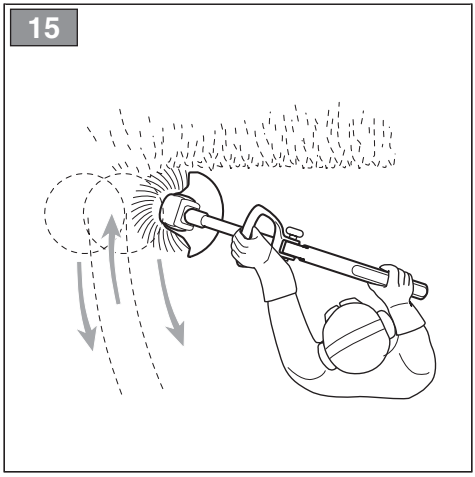

16

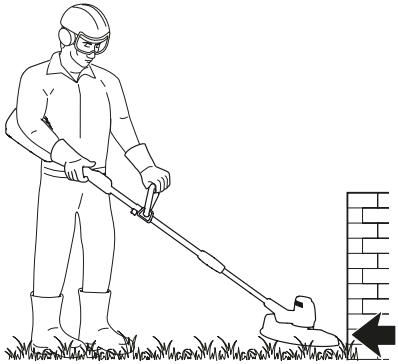

17

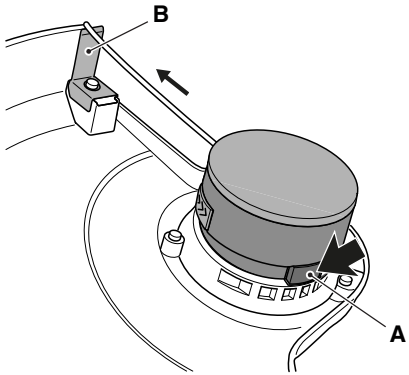

18

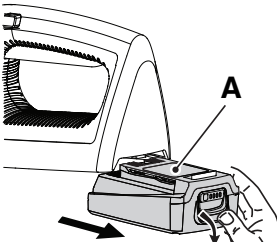

19 I

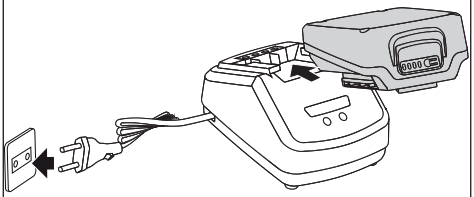

20 II

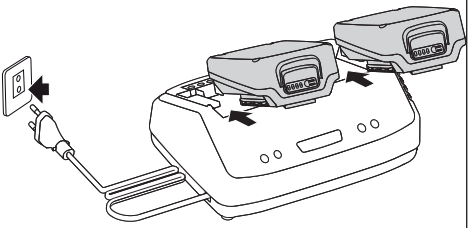

21 III

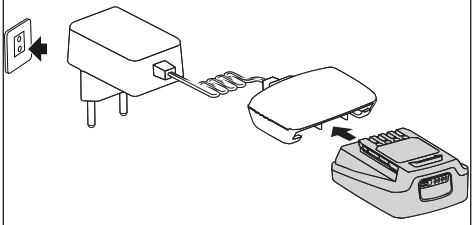

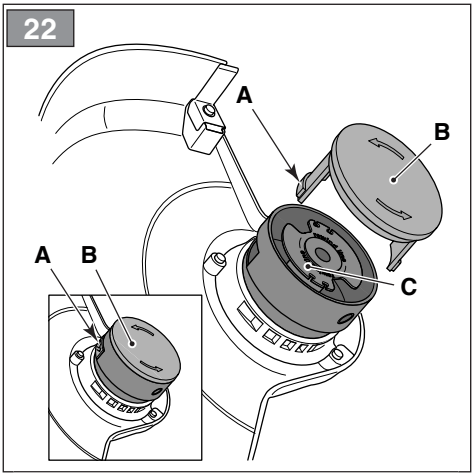
22
A
B
A
B
C

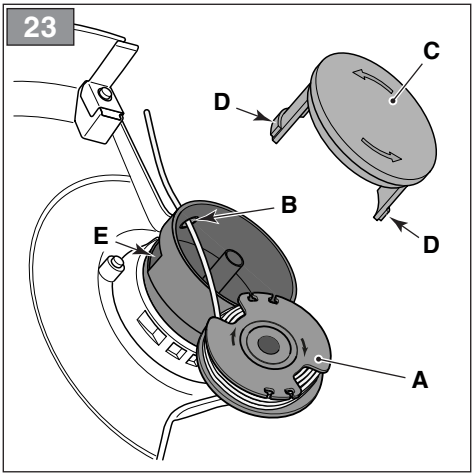
23
C
D
B
E
D
A

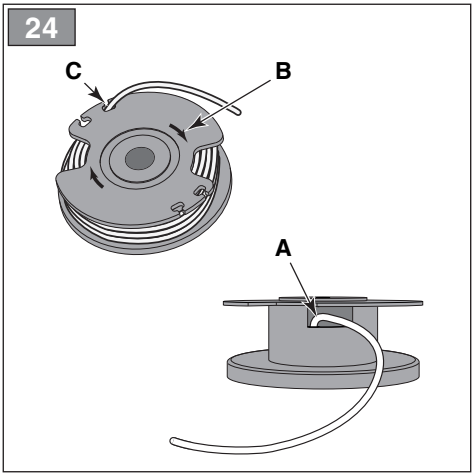
24
C
B
A

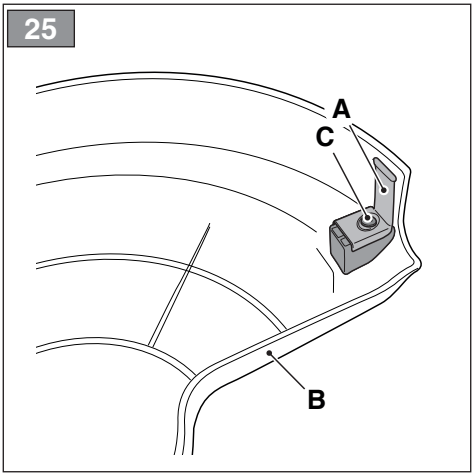
25
A
C
B

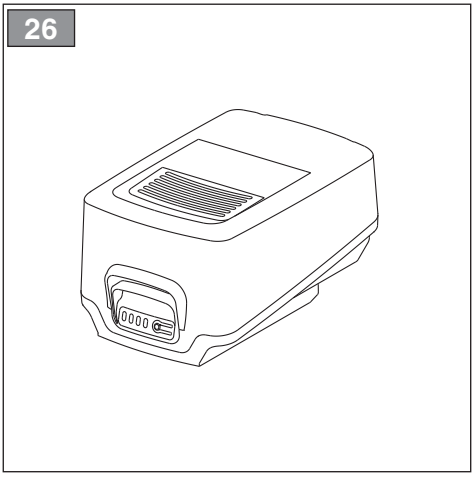
26

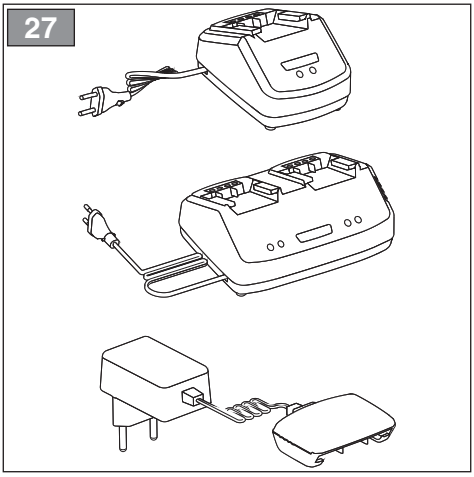
27

[1]	DATI TECNICI		LT 20 Li S	LT 20 Li A
[2]	Tensione e frequenza di alimentazione MAX	V / d.c.	20	20
[3]	Tensione e frequenza di alimentazione NOMINAL	V / d.c.	18	18
[4]	Velocità massima di rotazione dell'utensile (testina porta filo)	min^{-1}	7500	7500
[5]	Larghezza di taglio (testina porta filo)	mm	250	250
[6]	Diametro filo testina (max)	mm	1,6	1,6
[7]	Codice dispositivo di taglio		118805320/0	118805320/0
[8]	Codice protezione		118805321/0	118805321/0
[9]	Peso senza gruppo batteria e senza dispositivi di taglio	kg	2	2,2
[10] [11]	Livello di pressione sonora Incertezza di misura	dB(A) dB(A)	82,1 3	82,1 3
[12] [11]	Livello di potenza sonora misurato Incertezza di misura	dB(A) dB(A)	87,5 4,46	87,5 4,46
[13]	Livello di potenza sonora garantito	dB(A)	92	92
[14] [15] [16] [11]	Livello di vibrazioni - Impugnatura anteriore - Impugnatura posteriore Incertezza di misura	 m/s2 m/s2 m/s2	 2,87 4,98 1,5	 2,87 4,98 1,5

[17]	ACCESSORI A RICHIESTA		
[18]	Gruppo batteria, mod.	BT 20 Li 2.0 S BT 20 Li 4.0 S	BT 20 Li 2.0 A BT 20 Li 4.0 A
[19]	Carica batteria, mod.	CG 20 Li CGD 20 Li CGW 20 Li	CG 20 Li CGD 20 Li CGW 20 Li

a) NOTA: il valore totale dichiarato delle vibrazioni è stato misurato attenendosi ad un metodo normalizzato di prova e può essere utilizzato per fare un paragone tra un utensile e l'altro. Il valore totale delle vibrazioni può essere utilizzato anche in una valutazione preliminare dell'esposizione.

b) AVVERTENZA: l'emissione di vibrazioni nell'uso effettivo dell'utensile può essere diversa dal valore totale dichiarato a seconda dei modi in cui si utilizza l'utensile. Pertanto è necessario, durante il lavoro, adottare le seguenti misure di sicurezza volte a proteggere l'operatore: indossare guanti durante l'uso, limitare i tempi d'utilizzo della macchina e accorciare i tempi in cui si tene premuta la leva comando acceleratore.

[1] **BG - ТЕХНИЧЕСКИ ДАННИ**
[2] Напрежение и честота на захранване MAX
[3] Напрежение и честота на захранване NOMINAL
[4] Максимална ротационна скорост на инструмента (глава за корда)
[5] Ширина на рязане (глава за корда)
[6] Диаметър за глава за корда (max)
[7] Код на инструмента за рязане
[8] Код на защитата
[9] Тегло без акумулаторния блок и без режещи устройства
[10] Ниво на звуковото налягане
[11] Несигурност на измерване
[12] Ниво на измерената звукова мощност
[13] Гарантирано ниво на звукова мощност
[14] Вибрации
[15] - Предна ръкохватка
[16] - Задна ръкохватка
[17] ПРИНАДЛЕЖНОСТИ ПО ЗАЯВКА
[18] Блок на акумулатора, мод.
[19] Зареждане на акумулатора

а) ЗАБЕЛЕЖКА: декларираната обща стойност на вибрации е измерена придържайки се към стандартизиран метод на изпитване на сравнение между един и друг инструмент. Общата стойност на вибрации може да се използва и за предварителна оценка на излагането.

b) ПРЕДУПРЕЖДЕНИЕ: издаването на вибрации при реалното използване на инструмента може да бъде различна от общата декларирана стойност,в зависимост от начините на използване на инструмента. Поради това е необходимо по време на работа да се вземат следните предпазни мерки целящи предпазването на оператора: носете ръкавици по време на използването, ограничете времената на използване на машината и намалете времената, през които се държи натиснат лоста за управление на ускорителя.

[1] **BS - TEHNIČKI PODACI**
[2] Napon i frekvencija napajanja MAX
[3] Napon i frekvencija napajanja NOMINAL
[4] Maksimalna brzina okretanja alatke (glava s reznom niti)
[5] Širina reza (glava s reznom niti)
[6] Promjer niti glave (maks.)
[7] Šifra rezne glave
[8] Šifra štitnika
[9] Težina bez baterije i bez nastavaka za rezanje
[10] Razina zvučnog pritiska
[11] Mjerna nesigurnost
[12] Izmjerena razina zvučne snage
[13] Garantirana razina zvučne snage
[14] Vibracije
[15] - Prednji rukohvat
[16] - Zadnji rukohvat
[17] DODATNA OPREMA NA ZAHTJEV
[18] Baterija, mod.
[19] Punjač baterije

a) NAPOMENA: ukupna prijavljena vrijednost vibracija izmjerena je prema normalizovanoj metodi ispitivanja i može se koristiti za vršenje poređenja između dvije alatke. Ukupna vrijednost vibracija može se koristiti i prilikom prethodne procjene izloženosti.

b) UPOZORENJE: emisija vibracija prilikom stvarne upotrebe alatke može se razlikovati od ukupne prijavljene vrijednosti u zavisnosti od načina na koji se koristi alatka. Stoga je neophodno, za vrijeme rada, primijeniti slijedeće sigurnosne mjere za zaštitu radnika: koristiti rukavice za vrijeme upotrebe, ograničiti vrijeme upotrebe mašine i skratiti vrijeme za koje se drži pritisnuta poluga komande gasa.

[1] **CS - TECHNICKÉ PARAMETRY**
[2] Napájecí napětí a frekvence MAX
[3] Napájecí napětí a frekvence NOMINAL
[4] Maximální rychlost otáčení nástroje (strunová hlava)
[5] Záběr (strunová hlava)
[6] Průměr struny (max.)
[7] Kód sekacího zařízení
[8] Kód ochranného krytu
[9] Hmotnost bez akumulátoru a bez řezných nástrojů
[10] Úroveň akustického tlaku
[11] Nepřesnost měření
[12] Naměřená hladina akustického výkonu
[13] Zaručená úroveň akustického výkonu
[14] Vibrace
[15] - Přední rukojeť
[16] - Zadní rukojeť
[17] VOLITELNÉ PŘÍSLUŠENSTVÍ
[18] Akumulátorová jednotka, mod.
[19] Nabíječka akumulátorů

a) POZNÁMKA: prohlášená celková hodnota vibrací byla naměřena s použitím normalizované zkušební metody a lze ji použít pro srovnání jednotlivých nástrojů. Celková hodnota vibrací může být použita také při přípravném vyhodnocování vystavení vibracím.

b) VAROVÁNÍ: emise vibrací při skutečném použití nástroje může být odlišná od deklarované celkové hodnoty v závislosti na režimech, ve kterých se daný nástroj používá. Proto je třeba během práce přijmout níže uvedená bezpečnostní opatření, jejichž cílem je ochránit operátora: během běžného použití mějte nasazené rukavice a omezte dobu použití stroje a zkraťte doby, během kterých je zatlačena ovládací páka plynu.

[1] **DA - TEKNISKE DATA**
[2] Forsyningsspænding og -frekvens MAX
[3] Forsyningsspænding og -frekvens NOMINAL
[4] Maksimalt omdrejningstal for redskabet (trådhoved)
[5] Skærebredde (trådhoved)
[6] Diameter af tråd i hovedet (maks.)
[7] Skæreanordningens varenr.
[8] Beskyttelsens varenummer
[9] Vægt uden batteri og uden klippeanordning
[10] Lydtryksniveau
[11] Måleusikkerhed
[12] Målt lydeffektniveau
[13] Garanteret lydeffektniveau
[14] Vibrationer
[15] - Forreste håndtag
[16] - Bagerste håndtag
[17] TILBEHØR
[18] Batterienhed, mod.
[19] Batterioplader

a) BEMÆRK: den samlede erklærede værdi af vibrationer blev målt ifølge en standardiseret metode til afprøvning og kan bruges til at foretage en sammenligning mellem forskellige redskaber. Den samlede værdi af vibrationer kan også bruges til en indledende vurdering af eksponeringen.

b) ADVARSEL: den faktiske udsendelse af vibrationer i forbindelse med brug af redskabet kan afvige fra den samlede attesterede værdi afhængigt af den konkrete brug af redskabet. Derfor er det nødvendigt, at man under arbejdet tager følgende sikkerhedsforanstaltninger for at beskytte brugeren. Bær handsker under brug, begræns den tid maskinen bruges og forkort den tid hvor gashåndtaget holdes aktiveret.

[1] **DE - TECHNISCHE DATEN**
[2] Versorgungsspannung und -frequenz MAX
[3] Versorgungsspannung und -frequenz NOMINAL
[4] Maximale Drehgeschwindigkeit des Werkzeugs (Fadenkopf)
[5] Schnittbreite (Fadenkopf)
[6] Durchmesser Faden Fadenkopf (max.)
[7] Code Messer
[8] Nummer Schutzeinrichtung
[9] Gewicht ohne Akku und ohne Schneideeinsätze
[10] Schalldruckpegel
[11] Messungenauigkeit
[12] Gemessener Schallleistungspegel
[13] Garantierter Schallleistungspegel
[14] Vibrationen
[15] - Vorderer Handgriff
[16] - Hinterer Handgriff
[17] ZUBEHÖR AUF ANFRAGE
[18] Batterieeinheit, Mod.
[19] Batterieladegerät

a) HINWEIS: Der erklärte Gesamtwert der Vibrationen wurde durch eine standardisierte Methode gemessen. Er kann verwendet werden, um einen Vergleich zwischen verschiedenen Werkzeugen anzustellen. Der Gesamtwert der Vibrationen kann auch bei einer Vorabbewertung der Vibrationsbelastung eingesetzt werden.

b) WARNUNG: Die Schwingungsemission bei der effektiven Verwendung des Werkzeugs kann sich je nach den Einsatzarten des Werkzeugs vom erklärten Gesamtwert unterscheiden. Deshalb ist es notwendig, während der Arbeit die folgenden Sicherheitsmaßnahmen zu ergreifen, um den Bediener zu schützen: Handschuhe während der Verwendung anziehen, die Einsatzzeiten der Maschine begrenzen und die Zeiten verkürzen, in denen man den Gashebel gedrückt hält.

[1] **EL - ΤΕΧΝΙΚΑ ΧΑΡΑΚΤΗΡΙΣΤΙΚΑ**
[2] Τάση και συχνότητα τροφοδοσίας MAX
[3] Τάση και συχνότητα τροφοδοσίας NOMINAL
[4] Μέγιστη ταχύτητα περιστροφής εργαλείου (κεφαλή νήματος)
[5] Πλάτος κοπής (κεφαλή νήματος)
[6] Διάμετρος νήματος κεφαλής (μέγ.)
[7] Κωδικός συστήματος κοπής
[8] Κωδικός προστασίας
[9] και χωρίς διατάξεις κοπής
[10] Αβέβαιότητα μέτρησης
[11] Στάθμη ηχητικής πίεσης
[12] Μετρημένη στάθμη ηχητικής ισχύος
[13] Στάθμη εγγυώμενης ηχητικής ισχύος
[14] Κραδασμοί
[15] - Εμπρός χειρολαβή
[16] - Πίσω χειρολαβή
[17] ΠΡΟΑΙΡΕΤΙΚΑ ΑΞΕΣΟΥΑΡ
[18] Μπαταρία, μοντ.
[19] Φορτιστής Μπαταρίας

a) ΣΗΜΕΙΩΣΗ: η συνολική δηλωμένη τιμή των κραδασμών έχει μετρηθεί με βάση μια πρότυπη μέθοδο δοκιμής και μπορεί να χρησιμοποιηθεί για τη σύγκριση διαφόρων εργαλείων. Η συνολική τιμή των κραδασμών μπορεί επίσης να χρησιμοποιηθεί για μια προκαταρκτική εκτίμηση της έκθεσης.

b) ΠΡΟΕΙΔΟΠΟΙΗΣΗ: η εκπομπή κραδασμών κατά την πραγματική χρήση του εργαλείου μπορεί να είναι διαφορετική από τη συνολική δηλωμένη τιμή ανάλογα με τον τρόπο χρήσης του εργαλείου. Επομένως είναι απαραίτητο, κατά την εργασία, να λάβετε τα παρακάτω μέτρα ασφαλείας για την προστασία του χειριστή: φορέστε γάντια κατά τη χρήση, περιορίστε το χρόνο χρήσης του μηχανήματος και μειώστε το χρόνο χρήσης του μοχλού γκαζιού.

[1] **EN - TECHNICAL DATA**
[2] Power supply frequency and voltage MAX
[3] Power supply frequency and voltage NOMINAL
[4] Maximum tool rotation speed (cutting line head)
[5] Cutting width (cutting line head)
[6] Diameter of cutting line (max)
[7] Cutting linehead code
[8] Protection code
[9] Weight without battery pack and without cutting means
[10] Sound pressure level
[11] Uncertainty of measure
[12] Measured sound power level
[13] Guaranteed sound power level
[14] Vibrations
[15] Front handle
[16] Rear handle
[17] ACCESSORIES AVAILABLE ON REQUEST
[18] Battery pack, model
[19] Battery charger

a) NOTE: the declared total vibration value was measured using a normalised test method and can be used to conduct comparisons between one tool and another. The total vibration value can also be used for a preliminary exposure evaluation.

b) WARNING: the vibrations emitted during actual use of the tool can differ from the declared total value according to how the tool is used. Whilst working, therefore, it is necessary to adopt the following safety measures designed to protect the operator: wear protective gloves whilst working, use the machine for limited periods at a time and decrease the time during which the throttle control lever is pressed.

[1] **ES - DATOS TÉCNICOS**
[2] Tensión y Frecuencia de alimentación MAX
[3] Tensión y Frecuencia de alimentación NOMINAL
[4] Velocidad máxima de rotación de la herramienta (cabezal porta hilo)
[5] Ancho de corte (cabezal porta hilo)
[6] Diámetro hilo cabezal (máx)
[7] Código dispositivo de corte
[8] Código de protección
[9] Peso sin grupo de batería y sin dispositivos de corte
[10] Nivel de presión sonora
[11] Incertidumbre de medida
[12] Nivel de potencia sonora medido
[13] Nivel de potencia sonora garantizado
[14] Vibraciones
[15] - Empuñadura anterior
[16] - Empuñadura posterior
[17] ACCESORIOS POR ENCARGO
[18] Grupo de la batería, mod.
[19] Cargador de la batería

a) NOTA: el valor total de la vibración se ha medido según un método normalizado de prueba y puede utilizarse para realizar una comparaciàon entre una máquina y otra . El valor total de la vibración también se puede emplear para la valoración preliminar de la exposición.

b) ADVERTENCIA: la emisión de vibración en el uso efectivo del aparato puede ser diferente al valor total declarado según los modos en los que se utiliza la herramienta. Por ello, durante la actividad se deben poner en práctica las siguientes medidas de seguridad para el usuario: usar guantes, limitar el tiempo de uso de la máquina, así como el tiempo que se mantiene presionada la palanca de mando del acelerador.

[1] **ET - TEHNILISED ANDMED**
[2] Toite pinge ja sagedus MAX
[3] Toite pinge ja sagedus NOMINAL
[4] Lõikeseadme maksimum pöördekiirus (nööripeaga)
[5] Lõikelaius (nööripeaga)
[6] Nööripea läbimõõt (maks.)
[7] Lõikeseadme kood
[8] Kaitse kood
[9] Kaal ilma akuta Õja ilma liikevahenditeta
[10] Helirõhu tase
[11] Mõõtemääramatus
[12] Helivõimsuse mõõdetav tase
[13] Garanteeritud helivõimsuse tase
[14] Vibratsioon
[15] - Eesmine käepide
[16] - Tagumine käepide
[17] LISASEADMED TELLIMISEL
[18] Aku, mud.
[19] Akulaadija

a) MÄRKUS: deklareeritud koguvibratsiooni tase mõõdeti standardiseeritud testi käigus, mille abil on võimalik võrrelda omavahel erinevate tööriistade vibratsiooni. Deklareeritud koguvibratsiooni võib kasutada ka eeldatava vibratsiooni käes olemise hindamiseks.

b) HOIATUS: tegelikud tööriista kasutamisel tekkivad vibratsioonid võivad erineda deklareeritud koguvibratsiooni tasemest sõltuvalt tööriista kasutamise viisist. Seepärast tuleb töö ajal kasutusel võtta ohutusmeetodid, millega töötajat kaitsta: kandke kasutamise ajal kindaid, piirake masina kasutamise aega ja lühendage perioode, mille vältel hoitakse gaasihooba all.

[1] **FI - TEKNISET TIEDOT**
[2] Syöttöjännite ja -taajuus MAX
[3] Syöttöjännite ja -taajuus NOMINAL
[4] Työkalun maksimipyörimisnopeus (siimapää)
[5] Leikkuuleveys (siimapää)
[6] Siimapään siiman halkaisija (max)
[7] Leikkuuvälineen koodi
[8] Suojakoodi
[9] Paino ilman akkuyksikköä ja ilman leikkuuvälineitä
[10] Äänenpaineen taso
[11] Mittauksen epävarmuus
[12] Mitattu äänitehotaso
[13] Taattu äänitehotaso
[14] Tärinä
[15] - Etukahva
[16] - Takakahva
[17] SAATAVANA OLEVAT LISÄVARUSTEET
[18] Akkuyksikkö, malli
[19] Akkulaturi

a) HUOMAUTUS: tärinän kokonaisarvo on mitattu käyttämällä normalisoitua testimenetelmää ja sitä voidaan käyttää verrattaessa työkaluja keskenään. Tärinän kokonaisarvoa voidaan käyttää myös kun tehdään altistumista koskeva esiarviointi.

b) VAROITUS: laitteen tuottama tärinä työvälineen todellisen käytön aikana saattaa poiketa ilmoitetusta kokonaisarvosta käyttötavasta riippuen. Tämän vuoksi on tarpeen soveltaa seuraavia käyttäjää suojaavia turvatoimenpiteitä: käyttää käsineitä käytön aikana, rajoittaa laitteen käyttöaikaa ja lyhentää aikoja jolloin kaasuttimen vipua pidetään painettuna.

[1] **FR - CARACTÉRISTIQUES TECHNIQUES**
[2] Tension et fréquence d'alimentation MAX
[3] Tension et fréquence d'alimentation* NOMINAL
[4] Vitesse maximum de rotation de l'outil (tête à fil)
[5] Largeur de coupe (tête à fil)
[6] Diamètre fil tête (max.)
[7] Code organe de coupe
[8] Code protection
[9] Poids sans groupe batterie et sans dispositifs de coupe
[10] Niveau de pression sonore
[11] Incertitude de la mesure
[12] Niveau de puissance sonore mesuré
[13] Niveau de puissance sonore garanti
[14] Vibrations
[15] - Poignée avant
[16] - Poignée arrière
[17] ÉQUIPEMENTS SUR DEMANDE
[18] Groupe de batteries, mod.
[19] Chargeur de batterie

a) REMARQUE : la valeur totale déclarée des vibrations a été mesurée selon une méthode d'essai normalisée et peut être utilisée pour comparer un outillage avec un autre. La valeur totale des vibrations peut être utilisée aussi pour une évaluation préalable à l'exposition.

b) AVERTISSEMENT : l'émission de vibrations lors de l'utilisation effective de l'outillage peut différer de la valeur totale déclarée en fonction des modes d'utilisation de l'outillage. Par conséquent, il est nécessaire, pendant le travail, d'adopter les mesures de sécurité suivantes en vue de protéger l'opérateur : porter des gants durant l'utilisation, limiter les temps d'utilisation de la machine et écourter les temps pendant lesquels le levier de commande de l'accélérateur est enfoncé.

[1] **HR - TEHNIČKI PODACI**
[2] Napon i frekvencija napajanja MAX
[3] Napon i frekvencija napajanja NOMINAL
[4] Maksimalna brzina rotacije alata (glava s reznom niti)
[5] Širina rezanja (glava s reznom niti)
[6] Promjer niti glave (maks.)
[7] Šifra noža
[8] Šifra štitnika
[9] Težina bez baterije i bez dodataka za rezanje
[10] Razina zvučnog tlaka
[11] Mjerna nesigurnost
[12] Izmjerena razina zvučne snage
[13] Zajamčena razina zvučne snage
[14] Vibracije
[15] - Prednja ručka
[16] - Stražnja ručka
[17] DODATNA OPREMA PO NARUDŽBI
[18] Sklop baterije, mod.
[19] Punjač baterija

a) NAPOMENA: izjavljena ukupna vrijednost vibracija izmjerena je pridržavajući se normirane probne metode i može se koristiti za usporedbu jednog alata s drugim. Ukupnu vrijednost vibracija može se koristiti i u preliminarnoj procjeni izloženosti.

b) UPOZORENJE: emisija vibracija pri stvarnoj uporabi alata može se razlikovati od izjavljene ukupne vrijednosti, ovisno o načinima korištenja alata. Stoga je za vrijeme rada potrebno poduzeti sljedeće sigurnosne mjere namijenjene zaštiti rukovatelja: nositi rukavice tijekom uporabe, ograničiti vrijeme korištenja stroja te skratiti vrijeme držanja pritisnute upravljačke ručice gasa.

[1] **HU - MŰSZAKI ADATOK**
[2] Tápfeszültség és -frekvencia MAX
[3] Tápfeszültség és -frekvencia NOMINAL
[4] A szerszám maximális forgási sebessége (huzaltár fej)
[5] Munkaszélesség (huzaltár fej)
[6] Fej huzal keresztmetszet (max.)
[7] Vágóegység kódszáma
[8] Védelem kódja
[9] Tömeg akkumulátor egység nélkül és vágóeszközök nélkül
[10] Hangnyomásszint
[11] Mérési bizonytalanság
[12] Mért zajteljesítmény szint
[13] Garantált zajteljesítmény szint
[14] Rezgések
[15] - Elülső markolat
[16] - Hátsó markolat
[17] RENDELHETŐ KIEGÉSZÍTŐK
[18] Akkumulátor-egység, típus
[19] Akkumulátor-töltő

a) MEGJEGYZÉS: a rezgés névleges összértékét szabványos teszt módszerrel mértük, ezért alkalmazható más szerszámokkal való összehasonlításra. A rezgés névleges összértéke a kitettség előzetes értékelésére is alkalmas.

b) FIGYELMEZTETÉS: a szerszám valós használata során keletkező rezgés eltérhet a névleges összértéktől a szerszám használati módjának függvényében. Ezért a munka alatt alkalmazni kell a kezelő védelmét szolgáló biztonsági intézkedéseket: viseljen munkakesztyűt a használat során, korlátozza a gép használati idejét és lehetőleg rövid ideig tartsa nyomva a gázkart.

[1] **LT - TECHNINIAI DUOMENYS**
[2] Maitinimo įtampa ir dažnis MAX
[3] Maitinimo įtampa ir dažnis NOMINAL
[4] Maksimalus įrankio (pjovimo valo galvutės) sukimosi greitis
[5] Pjovimo plotis (pjovimo valo galvutė)
[6] Valo galvutės skersmuo (maks.)
[7] Pjovimo įtaiso kodas
[8] Apsaugos kodas
[9] Svoris be baterijos ir be pjaustymo įrenginių
[10] Garso slėgio lygis
[11] Matavimo paklaida
[12] Išmatuotas garso galios lygis
[13] Garantuotas garso galios lygis
[14] Vibracijos
[15] - Priekinė rankena
[16] - Galinė rankena
[17] UŽSAKOMI PRIEDAI
[18] Akumuliatoriaus blokas, mod.
[19] Akumuliatoriaus įkroviklis

a) PASTABA: bendras deklaruojamas vibracijų lygis buvo išmatuotas laikantis standartizuoto bandymo metodo ir gali būti naudojamas lyginant vieną įrankį su kitu. Bendras vibracijų lygis gali būti naudojamas preliminariam vibracijų įvertinimui.

b) ĮSPĖJIMAS: vibracijų skleidimo lygis eksploatuojant įrenginį gali skirtis nuo bendro deklaruojamo vibracijų lygio, priklausomai nuo būdų, kaip bus naudojamas įrankis. Dėl šios priežasties darbo metu yra būtina imtis saugos priemonių, susijusių su operatoriaus apsauga: naudojimo metu mūvėti pirštines, riboti įrenginio darbo trukmę ir trumpinti laiką, kurio metu būna paspausta akceleratoriaus valdymo svirtis.

[1] **LV - TEHNISKIE DATI**
[2] Barošanas spriegums un frekvence MAX
[3] Barošanas spriegums un frekvence NOMINAL
[4] Maksimālais instrumenta griešanās ātrums (auklas turēšanas galviņa)
[5] Pļaušanas platums (auklas turēšanas galviņa)
[6] Galviņas auklas diametrs (maks.)
[7] Griezējierīces kods
[8] Aizsarga kods
[9] Svars bez bateriju paketes un bez griezējierīcēm
[10] Skaņas spiediena līmenis
[11] Mērījumu kļūda
[12] Mērītās skaņas jaudas līmenis
[13] Garantētais skaņas jaudas līmenis
[14] Vibrācija
[15] - Priekšējais rokturis
[16] - Aizmugurējais rokturis
[17] PIEDERUMI PĒC PASŪTĪJUMA
[18] Akumulatora mezgls, mod.
[19] Akumulatoru lādētājs

a) PIEZĪME: kopējā norādītā vibrāciju intensitātes vērtība tika izmērīta, izmantojot standarta pārbaudes metodi, un to var izmantot ierīču savstarpējai salīdzināšanai. Kopējo vibrāciju intensitātes vērtību var izmantot arī sākotnējai ekspozīcijas novērtēšanai.

b) BRĪDINĀJUMS: vibrāciju līmenis ierīces faktiskās izmantošanas laikā var atšķirties no kopējās norādītās vērtības, atkarībā no ierīces izmantošanas veida. Tāpēc darba laikā ir svarīgi izmantot šādus operatora aizsardzības līdzekļus: izmantošanas laikā valkājiet cimdus, ierobežojiet mašīnas izmantošanas laiku un saīsiniet laiku, kuru akseleratora vadības svira atrodas nospiestā stāvoklī.

[1] **MK - ТЕХНИЧКИ ПОДАТОЦИ**
[2] Волтажа и вид на напојување MAX
[3] Волтажа и вид на напојување NOMINAL
[4] Максимална брзина на ротација на дополнителната опрема (калем со конец)
[5] Ширина на косење (калем со конец)
[6] Дијаметар на калемот со конец (макс)
[7] Код на уредот за сечење
[8] Код на заштитата
[9] Тежина без батерии и без сечила
[10] Ниво на звучен притисок
[11] Отстапување од мерењата
[12] Измерено ниво на бучава
[13] Гарантирано ниво на бучава
[14] Вибрации
[15] - Предна рачка
[16] - Задна рачка
[17] ДОПОЛНИТЕЛНА ОПРЕМА ПО ИЗБОР
[18] Комплет со батерија, модел
[19] Полнач за батерија

a) ЗАБЕЛЕШКА: вкупната посочена вредност за вибрациите е измерена со пробен метод за нормализирање и може да се користи за споредбена вредност на еден уред со друг. Вкупната вредност на вибрациите може да се користи и за прелиминарна проценка на изложеноста.

b) ВНИМАНИЕ: емисијата на вибрациите при ефективна употреба може да се разликува од вкупната посочена вредност според начинот на употреба на уредот. Затоа е неопходно во текот на работата да се направат повеќе безбедносни мерења за да се заштити операторот: носете чевли во текот на употребата, ограничете го времето на употреба на машината и скратете го времето кога треба да се притисне рачката за управување со забрзувачот.

[1] **NL - TECHNISCHE GEGEVENS**
[2] Spanning en frequentie voeding MAX
[3] Spanning en frequentie voeding NOMINAL
[4] Maximale rotatiesnelheid van het werktuig (draadhouder)
[5] Snijbreedte (draadhouder)
[6] Diameter draadhouder (max)
[7] Code snij-inrichting
[8] Code bescherming
[9] Gewicht zonder batterij-eenheid and without cutting means
[10] Niveau geluidsdruk
[11] Meetonzekerheid
[12] Gemeten geluidsvermogenniveau
[13] Gegarandeerd geluidsniveau
[14] Trillingen
[15] - Voorste handgreep
[16] - Achterste handgreep
[17] OP AANVRAAG LEVERBARE ACCESSOIRES
[18] Accugroep, mod.
[19] Batterijlader

a) OPMERING: de totale verklaarde waarde van de trillingen werd gemeten met een genormaliseerde testmethode en kan gebruikt worden voor een vergelijking tussen twee werktuigen. De totale waarde van de trillingen kan ook gebruikt worden in een voorafgaande evaluatie van de blootstelling.

b) WAARSCHUWING: de emissie van trillingen bij het effectief gebruik van het werktuig kan verschillen van de totale verklaarde waarden, al naar gelang de manieren waarop het werktuig gebruikt wordt . Daarom is het noodzakelijk, tijdens het werk, de volgende veiligheidsmaatregelen toe te passen om de bediener te beschermen: handschoenen te gebruiken tijdens het gebruik, het gebruik van de machine te beperken en de de bedieningshendel van de versnelling zo kort mogelijk ingedrukt te houden.

[1] **NO - TEKNISKE DATA**
[2] Matespenning og -frekvens MAX
[3] Matespenning og -frekvens NOMINAL
[4] Maksimal omdreiningshastighet for verktøyet (trådspolen)
[5] Klippebredde (trådspole)
[6] Diameter for trådspolens tråd (maks)
[7] Artikkelnummer for klippeinnretning
[8] Artikkelnummer for vern
[9] Vekt uten batterienhet og uten enhet for kutting
[10] Lydtrykknivå
[11] Måleusikkerhet
[12] Målt lydeffektnivå
[13] Garantert lydeffektnivå
[14] Vibrasjoner
[15] - Håndtak fremme
[16] - Håndtak bak
[17] TILBEHØR PÅ FORESPØRSEL
[18] Batteri, modell
[19] Batterilader

a) MERK: Oppgitt totalverdi for vibrasjonene har blitt målt ved å bruke en normal prøvemetode og kan brukes for å sammenligne et redskap med et annet. Den totale vibrasjonsverdien kan også brukes i en foreløpig eksponeringsvurdering.

b) ADVARSEL: emisjon av vibrasjoner ved effektiv bruk av redskapet kan avvike fra oppgitt totalverdi i henhold til måten redskapet brukes på. Derfor er det nødvendig, under arbeidet, å ta i bruk følgende sikkerhetstiltak for å beskytte operatøren: iføre seg hansker ved bruk, begrense maskinens brukstid og korte ned på tiden som man holder inne akselerator kommandospaken.

[1] **PL - DANE TECHNICZNE**
[2] Napięcie i częstotliwość zasilania MAX
[3] Napięcie i częstotliwość zasilania NOMINAL
[4] Maksymalna prędkość obrotowa urządzenia (głowica żyłkowa)
[5] Szerokość cięcia (głowica żyłkowa)
[6] Średnica głowicy żyłkowej (maks)
[7] Kod agregatu tnącego
[8] Kod zabezpieczenia
[9] Ciężar bez zespołu akumulatora i bez urządzeń tnących
[10] Poziom ciśnienia akustycznego
[11] Błąd pomiaru
[12] Mierzony poziom mocy akustycznej
[13] Gwarantowany poziom mocy akustycznej
[14] Wibracje
[15] - Uchwyt przedni
[16] - Uchwyt tylny
[17] AKCESORIA NA ZAMÓWIENIE
[18] Zespół akumulatora, mod.
[19] Ładowarka akumulatora

a) UWAGA: Całkowita wskazana wartość drgań została zmierzona zgodnie ze znormalizowaną metodą badania i może być wykorzystana w celu dokonania porównania między dwoma urządzeniami. Całkowita wartość drgań może być również stosowana do wstępnej oceny zagrożenia.

b) UWAGA: emisja drgań w praktycznym zastosowaniu niniejszego narzędzia może się różnić od deklarowanej wartości łącznej, w zależności od sposobu użytkowania urządzenia. Dlatego, w celu zapewnienia bezpieczeństwa użytkownika, konieczne jest podczas pracy z urządzeniem podjęcie następujących środków bezpieczeństwa: noszenie rękawic podczas korzystania z urządzenia, ograniczenie czasu użytkowania urządzenia i skrócenie czasu trzymania wciśniętej dźwigni obrotów silnika.

[1] **PT - DADOS TÉCNICOS**
[2] Tensão e frequência de alimentação MAX
[3] Tensão e frequência de alimentação NOMINAL
[4] Velocidade máxima de rotação da ferramenta (cabeça porta-fio)
[5] Largura de corte (cabeça porta-fio)
[6] Diâmetro fio da cabeça (máx)
[7] Código dispositivo de corte
[8] Código de proteção
[9] Peso sem grupo bateria e sem dispositivos de corte
[10] Nível de pressão sonora
[11] Incerteza de medição
[12] Nível medido de potência sonora
[13] Nível garantido de potência sonora
[14] Vibrações
[15] - Pega dianteira
[16] - Pega traseira
[17] ACESSÓRIOS A PEDIDO
[18] Grupo bateria, mod.
[19] Carregador de bateria

a) NOTA: o valor total declarado das vibrações foi mensurado de acordo com um método normalizado de ensaio e pode ser utilizado para comparar uma ferramenta com a outra. O valor total das vibrações também pode ser utilizado para uma avaliação preliminar da exposição.

b) ADVERTÊNCIA: a emissão de vibrações no uso efetivo da ferramenta pode ser diversa do valor total declarado de acordo com os modos com os quais a ferramenta é utilizada. Portanto, durante o trabalho, é necessário adotar as seguintes medidas de segurança para proteger o operador: usar luvas durante o uso, limitar o tempo de utilização da máquina e encurtar o tempo durante o qual a alavanca de comando é mantida pressionada.

[1] **RO - DATE TEHNICE**
[2] Tensiunea şi frecvenţa de alimentare MAX
[3] Tensiunea şi frecvenţa de alimentare NOMINAL
[4] Viteză maximă de rotaţie a sculei (unitate de suport fir)
[5] Lăţime de tăiere (cap de suport fir)
[6] Diametru fir unitate (max)
[7] Codul dispozitivului de tăiere
[8] Codul protecţiei
[9] Greutate fără grupul acumulator şi fără dispozitive de tăiere
[10] Nivel de presiune sonoră
[11] Nesiguranţă în măsurare
[12] Nivel de putere sonoră măsurat
[13] Nivel de putere sonoră garantat
[14] Vibraţii
[15] - Mâner faţă
[16] - Mâner spate
[17] ACCESORII LA CERERE
[18] Ansamblu baterie, mod.
[19] Alimentator pentru baterie

a) OBSERVAŢIE: valoarea totală declarată a vibraţiilor a fost măsurată ţinându-se cont de o metodă de probă normalizată şi poate fi utilizată pentru a compara instrumentele între ele. Valoarea totală a vibraţiilor poate fi utilizată şi pentru o evaluare preliminară a expunerii.

b) AVERTISMENT: emisia de vibraţii în utilizarea efectivă a instrumentului poate fi diferită faţă de valoarea totală declarată, în funcţie de modurile în care se utilizează instrumentul. Din acest motiv este nevoie ca, în timpul sesiunii de lucru, să se adopte următoarele măsuri de siguranţă menite să protejeze operatorul: purtarea mănuşilor în timpul utilizării, limitarea duratei de utilizarea a maşinii şi scurtarea duratei în care se ţine apăsată maneta de comandă a acceleratorului.

[1] **RU - ТЕХНИЧЕСКИЕ ХАРАКТЕРИСТИКИ**
[2] Напряжение и частота питания MAX
[3] Напряжение и частота питания NOMINAL
[4] Максимальная скорость вращения инструмента (триммерная головка)
[5] Ширина скашивания (триммерная головка)
[6] Диаметр корда (макс.)
[7] Код режущего приспособления
[8] Код защиты
[9] Вес без аккумулятора и без режущих устройств
[10] Уровень звукового давления
[11] Погрешность измерения
[12] Уровень измеренной звуковой мощности
[13] Гарантируемый уровень звуковой мощности
[14] Вибрация
[15] - Передняя рукоятка
[16] - Задняя рукоятка
[17] ДОПОЛНИТЕЛЬНОЕ ОБОРУДОВАНИЕ ПО ТРЕБОВАНИЮ
[18] Батарейный блок, мод.
[19] Зарядное устройство

a) ПРИМЕЧАНИЕ: общий заявленный уровень вибрации был измерен с использованием нормализованного метода испытаний, и его можно использовать для сравнения различных инструментов между собой. Общий уровень вибрации можно также использовать для предварительной оценки подверженности воздействию вибрации.
b) ПРЕДУПРЕЖДЕНИЕ: уровень вибрации во время фактической эксплуатации инструмента может отличаться от общего заявленного значения и зависит от режимов эксплуатации инструмента. Поэтому во время работы необходимо принимать следующие меры безопасности для защиты оператора: работать в перчатках, ограничивать время использования машины и сократить время, в течение которого рычаг управления дросселем остается нажатым.

[1] **SK - TECHNICKÉ PARAMETRE**
[2] Napájacie napätie a frekvencia MAX
[3] Napájacie napätie a frekvencia NOMINAL
[4] Maximálna rýchlosť otáčania nástroja (strunová hlava)
[5] Záber (strunová hlava)
[6] Priemer struny (max.)
[7] Kód kosiaceho zariadenia
[8] Kód ochranného krytu
[9] Váha akumulátorovej jednotky a bez rezných nástrojov
[10] Uroveň akustického tlaku
[11] Nepresnosť merania
[12] Hladina nameraného akustického výkonu
[13] Zaručená úroveň akustického výkonu
[14] Vibrácie
[15] - Predná rukoväť
[16] - Zadná rukoväť
[17] VOLITEĽNÉ PRÍSLUŠENSTVO
[18] Akumulátorová jednotka, mod.
[19] Nabíjačka akumulátora

a) POZNÁMKA: vyhlásená celková hodnota vibrácií bola nameraná s použitím normalizovanej skúšobnej metódy a je možné ju použiť na porovnanie jednotlivých nástrojov.

Celková hodnota vibrácií môže byť použitá aj pri prípravnom vyhodnocovaní vibrácií.

b) VAROVANIE: emisia vibrácií pri skutočnom použití nástroja môže byť odlišná od vyhlásenej celkovej hodnoty v závislosti na režimoch, v ktorých sa daný nástroj používa. Preto je potrebné počas práce prijať nižšie uvedené bezpečnostné opatrenia, ktoré majú za cieľ ochrániť operátora: počas bežného použitia majte nasadené rukavice, obmedzte dobu použitia stroja a skráťte doby, počas ktorých je zatlačená ovládacia páka plynu.

[1] **SL - TEHNIČNI PODATKI**
[2] Napetost in frekvenca električnega napajanja MAX
[3] Napetost in frekvenca električnega napajanja NOMINAL
[4] Največja hitrost rotacije orodja (glava z nitjo)
[5] Širina košnje (glava z nitjo)
[6] Premer niti (max)
[7] Šifra rezalne naprave
[8] Šifra zaščite
[9] Teža brez enote baterije in brez rezila
[10] Raven zvočnega pritiska
[11] Merilna negotovost
[12] Raven izmerjene zvočne moči
[13] Raven zagotovljene zvočne moči

[14] Vibracije
[15] - Prednji ročaj
[16] - Zadnji ročaj
[17] DODATNA OPREMA PO NAROČILU
[18] Sklop baterije, mod.
[19] Polnilnik baterije

a) OPOMBA: Deklarirana skupna vrednost vibracij je bila izmerjena v skladu z normirano metodo preizkušanja; mogoče jo je uporabiti za primerjavo med različnimi orodji. Skupna vrednost vibracij se lahko uporabi tudi za predhodno oceno izpostavitve.

b) OPOZORILO: Med dejansko uporabo orodja se oddajane vibracije lahko razlikujejo od deklarirane skupne vrednosti, kar je odvisno od načina uporabe orodja. Zato je treba med delom udejanjati naslednje varnostne ukrepe za zaščito upravljavca: med delom nosite rokavice, omejite čas uporabe stroja in skrajšajte intervale, med katerimi pritiskate na komandni vzvod pospeševalnika.

[1] **SR - TEHNIČKI PODACI**
[2] Napon i frekvencija napajanja MAX
[3] Napon i frekvencija napajanja NOMINAL
[4] Maksimalna brzina okretanja alatke (glava s reznom niti)
[5] Širina rezanja (glava s reznom niti)
[6] Prečnik niti glave (maks.)
[7] Šifra rezne glave
[8] Šifra štitnika
[9] Težina bez baterije i bez nastavaka za rezanje
[10] Nivo zvučnog pritiska
[11] Merna nesigurnost
[12] Izmeren nivo zvučne snage
[13] Garantovan nivo zvučne snage
[14] Vibracije
[15] - Prednja drška
[16] - Zadnja drška
[17] DODATNI PRIBOR PO NARUDŽBINI
[18] Baterija, mod.
[19] Punjač baterije

a) NAPOMENA: ukupna prijavljena vrednost vibracija izmerena je prema normalizovanoj metodi ispitivanja i može se koristiti za poređenje dve alatke. Ukupna vrednost vibracija može se koristiti i prilikom uvodne procene izloženosti.

b) UPOZORENJE: emisija vibracija prilikom efektivne upotrebe alatke može se razlikovati od ukupne prijavljene vrednosti u zavisnosti od načina na koji se koristi alatka. Stoga je potrebno, za vreme rada, primeniti sledeće sigurnosne mere u cilju zaštite radnika: nositi rukavice za vreme upotrebe, smanjiti vreme korišćenja mašine i skratiti vreme pritiskanja poluge komande gasa.

[1] **SV - TEKNISKA SPECIFIKATIONER**
[2] Spänning och frekvens MAX
[3] Spänning och frekvens NOMINAL
[4] Verktygets maximala rotationshastighet (trimmerhuvud)
[5] Klippbredd (trimmerhuvud)
[6] Trådens diameter (max)
[7] Skärenhetens kod
[8] Skyddskod
[9] Vikt utan batterigrupp och utan skärande anordningar
[10] Ljudtrycksnivå
[11] Tvivel med mått
[12] Uppmätt ljudeffektnivå
[13] Garanterad ljudeffektnivå
[14] Vibrationer
[15] - Främre handtag
[16] - Bakre handtag
[17] TILLBEHÖR PÅ BESTÄLLNING
[18] Batterienhet, mod.
[19] Batteriladdare

a) ANMÄRKNING: det totala angivna vibrationsvärdet har mätts i enlighet med en standardiserad testmetod och kan användas för en jämförelse mellan olika verktyg. Det totala vibrationsvärdet kan användas även vid en preliminär exponeringsbedömning.

b) VARNING: vibrationsemissioner under användningen av verktyget kan skilja sig från det totala värdet som anges beroende på hur verktyget används. Därför är det nödvändigt, under arbetet, att tillämpa de följande säkerhetsåtgärderna som avses för att skydda föraren: bär handskar under användningen, begränsa användningstiden och tiderna som gasreglagets spak hålls nedtryckt.

[1] **TR - TEKNİK VERİLER**
[2] Besleme gerilimi ve frekansı MAX
[3] Besleme gerilimi ve frekansı NOMINAL
[4] Aletin maksimum rotasyon hızı (misinalı kesme kafası)
[5] Kesim genişliği (misinalı kesme kafası)
[6] Kesme kafası çapı (maks)
[7] Kesim düzeni kodu
[8] Koruma kodu
[9] Batarya grubu olmadan ağırlık ve kesim araçları olmadan
[10] Ses basınç seviyesi
[11] Ölçü belirsizliği
[12] Ölçülen ses güç seviyesi
[13] Garanti edilen ses güç seviyesi
[14] Titreşim
[15] - Ön kabza
[16] - Arka kabza
[17] TALEP ÜZERİNE TEDARİK EDİLEN AKSESUARLAR
[18] Batarya grubu, mod.
[19] Batarya şarj cihazı

a) NOT: beyan edilen toplam titreşim değeri, normalize edilmiş test yöntemine uygun şekilde ölçülmüştür ve bir takım ile diğeri arasında karşılaştırma yapmak amacıyla kullanılabilir. Toplam titreşim değeri aynı zamanda maruz kalma durumuna dair ön değerlendirme yaparken de kullanılabilir.

b) UYARI: takımın etkili kullanımı sırasında yayılan titreşim, takımın kullanılma şekline bağlı olarak beyan edilen toplam değerden farklı olabilir. Bu nedenle, çalışma yapılırken operatörü korumaya yönelik aşağıdaki güvenlik tedbirleri alınmalıdır: kullanım sırasında eldiven takın, makinenin kullanıldığı süreleri sınırlandırın ve gaz kumanda levyesinin basılı tutulduğu süreleri kısaltın.

EN

WARNING!: READ THE INSTRUCTION BOOKLET THOROUGHLY BEFORE USING THE MACHINE. Keep for future reference.

INDEX

1. GENERAL INFORMATION 1
2. SAFETY REGULATIONS 1
3. GETTING TO KNOW THE MACHINE 6
   3.1 Description of the machine and planned use.. 6
   3.2 Main components (Fig.1) 6
   3.3 Product identification label (Fig.1) 7
   3.4 Safety signs (Fig. 2) 7
4. ASSEMBLY 7
   4.1 Unpacking 8
   4.2 Fitting the front hand grip 8
   4.3 Fitting the guard on the cutting head 8
   4.4 Fitting the indicator on the cutting limit 8
5. CONTROLS 8
   5.1 Throttle control lever 8
   5.2 Throttle safety lever/button 8
6. USING THE MACHINE 8
   6.1 Preparation 8
   6.2 Safety checks 9
   6.3 Start-up 9
   6.4 Operation 10
   6.5 Advice for operation 11
   6.6 Stop 11
   6.7 After use 11
7. MAINTENANCE 11
   7.1 General information 11
   7.2 Battery 11
   7.3 Cleaning the machine and the motor 12
   7.4 Nuts and bolts 12
   7.5 Cutting head 12
   7.6 Sharpening the line cutting knife 12
8. STORAGE 13
   8.1 Storing 13
   8.2 Storing the battery 13
9. HANDLING AND TRANSPORTATION 13
10. ASSISTANCE AND REPAIRS 13
11. WARRANTY 13
12. TROUBLESHOOTING 14
13. ACCESSORIES ON REQUEST 15
   13.1 Batteries 15
   13.2 Battery charger 15

1. GENERAL INFORMATION

1.1 HOW TO READ THE MANUAL

NOTE *or* **IMPORTANT** *These give details or further information on what has been previously indicated and aim to prevent damage to the machine or cause other damage.*

The ⚠ symbol highlights danger. Failure to observe the warning can lead to the risk of injury to oneself and others and/or damage.

The paragraphs highlighted in a square with grey spots indicate the optional characteristics not available on all models documented in this manual. Check if the characteristic is on this model.

Whenever reference is made to a position on the machine "front", "back", "left" or "right" hand side, this refers to the operator's working position.

2. SAFETY REGULATIONS

2.1 TRAINING

⚠ ***Read this manual carefully before using the machine. Become familiar with the controls and the proper use of the machine. Failure to follow the warnings and instructions may result in fire and/ or serious injury. Save all warnings and instructions for future reference.***

- Never allow the machine to be used by children or individuals with reduced physical, sensory or mental capabilities, or without experience and know-how, or individuals who do not have the necessary

familiarity with the instructions. Local regulations may restrict the age of the operator.

- Never use the machine if the user is tired or unwell, or has taken medicine, drugs, alcohol or any substances which may slow their reflexes and compromise their judgement.
- Bear in mind that the operator or user is responsible for accidents or unexpected events occurring to other people or their property. It is the user's responsibility to assess the potential risk of the area where work is to be carried out and to take all the necessary precautions to ensure his own safety and that of others, particularly on slopes or rough, slippery and unstable ground.
- If the machine is sold or lent to others, make sure that the operator looks over the user instructions contained in this manual.

2.2 PREPARATION

Personal Protective Equipment (PPE)

- Wear suitable work attire, hard-wearing safety footwear with non-slip soles and long trousers. Do not operate the machine barefoot or wearing open sandals. Wear ear-protection devices, anti-vibration gloves, protective goggles, and a half mask respirator.
- Use of hearing protections can reduce the ability to hear any warnings (shouting or alarms). Be careful of what occurs around you in the work area.
- Never wear scarves, shirts, necklaces, bracelets, loose flowing clothing, laces or ties or any hanging or flapping accessory that could catch in the machine or in any objects or materials in the work area.
- Tie your hair back if it is long.

Work area / Machine

- Thoroughly inspect the entire work area and remove anything that could be thrown by the machine or damage the cutting head/rotating units (stones, branches, iron wire, bones, etc.).
- To avoid the risk of fire, do not leave the machine with the motor hot on leaves or dry grass.

2.3 DURING OPERATION

Work area

- Do not use the machine in environments at risk of explosion, in the presence of flammable liquids, gas or powder. Power tools create sparks which may ignite the dust or fumes.
- Work only in daylight or with good artificial light in good visibility conditions.
- Check that there is nobody within 15 metres of the machine's range of operation or within 30 metres for heavier cutting.
- Avoid working with wet grass, in the rain and when there is a risk of a thunderstorm, especially lightning.
- Do not expose the machine to rain or wet environments. Water entering a power tool will increase the risk of electric shock.

- Where possible, avoid working on wet, slippery ground, on uneven or steep ground that does not guarantee stability for the operator.
- Pay careful attention to uneven ground (hills, dips), slopes, hidden hazards and obstacles that could limit visibility.
- Be very careful near ravines, ditches or embankments.
- Always work across the face of the slope and never up and down, being very careful when changing direction, making sure the cutting head is always downhill.
- Look out for traffic when using the machine near the road.
- Operate the machine only on a firm, level surface.

Behaviour

- When working, the machine must always be firmly held in both hands, keeping the power unit on the right of the body and the cutting unit below the line of the belt. Do not excessively extend arms.
- Avoid body contact with earthed or grounded surfaces, such as pipes, radiators, cookers and refrigerators. There is an increased risk of electric shock if your body is earthed or grounded.
- Always use caution and take on a firm and well-balanced position.
- Do not lose your balance.
- Do not overreach.
- Never run, always walk.
- Always keep hands and feet away from the cutting head, when starting and when using the machine.
- Attention: the cutting means will continue to rotate for a few seconds after disengagement or after you have switched off the motor. The rotating parts can cause serious injuries; avoid contact with these parts whilst they are still rotating.
- Be careful of flying debris coming from the cutting head.
- Be careful to avoid violent collisions between the cutting head and foreign objects/ obstacles. Kickback may occur if the cutting head comes into contact with an obstacle/ object. This contact can cause a rapid jerk in the opposite direction, pushing the cutting means up and towards the operator. Kickback can cause the operator to lose control of the machine, leading to serious consequences. To avoid kickbacks, take all the appropriate precautions indicated below:
  - Firmly hold the machine, with two hands, and place your body and arms in a position that allows you to resist kickback.
  - Do not extend the arms too high and do not cut above waist height.
  - Use only the cutting head specified by the manufacturer.
  - Follow the manufacturer's instructions concerning cutting head maintenance.
- Beware of injuries caused by devices used to cut the line length.

⚠ ***If something breaks or an accident occurs during work, turn off the motor immediately and move the machine away to prevent further damage; if an accident***

occurs with injuries or third parties are injured, carry out the first aid measures most suitable for the situation immediately and contact the medical authorities for any necessary health care. Carefully remove any debris which could cause damage or injury to persons or animals if ignored.

⚠ ***Prolonged exposure to vibrations can cause injuries and neurovascular disorders (also called "Raynaud's syndrome" or "white hand"), especially to people suffering from circulation disorders. The symptoms can regard the hands, wrists and fingers and are shown through loss of sensitivity, torpor, itching, pain and discolouring of or structural changes to the skin. These effects can be worsened by low ambient temperatures and/ or by gripping the hand grips excessively tightly. If the symptoms occur, the length of time the machine is used must be reduced and a doctor consulted.***

Use limitations

- Do not use the machine if you are unable to hold it with both hands or keep steady on your legs while working.
- Never assemble metal cutting head. **The use of metal or rigid blades of any type with this machine is prohibited.**
- Never use the machine with damaged, missing or incorrectly positioned guards.
- Don't use the machine if the attachments/tools are not installed in their seats.
- Never disengage, deactivate, remove or tamper with the safety systems/micro switches installed.
- Do not use the power tool if the switch does not turn it on and off. Any power tool that cannot be controlled with the switch is dangerous and must be repaired.
- Do not strain the machine too much and do not use a small machine for heavy-duty work; if you use the right machine, you will reduce the risk of hazards and improve the quality of your work.

2.4 MAINTENANCE, STORAGE

Ensure regular maintenance and correct storage to maintain machine safety and high performance levels.

Maintenance

- Never use the machine with worn or damaged parts. Faulty or worn-out parts must always be replaced and never repaired. Use original replacement parts only.
- Be careful during adjustment of the machine to prevent entrapment of the fingers between moving parts of the cutting head and fixed parts of the machine.

The noise and vibration levels shown in these instructions are the maximum levels for use of the machine. The use of an unbalanced cutting head, the excessive ⚠

speed of movement, or the absence of maintenance have a significant influence on noise emissions and vibrations. Consequently, it is necessary to take preventive steps to eliminate possible damage due to high levels of noise and stress from vibration; maintain the machine well, wear ear protection devices, and take breaks whilst working.

Storage

- To reduce fire risks, do not leave containers with debris inside a room.

2.5 RESIDUAL RISKS

Despite compliance with all safety precautions, some further hazards may remain:

- danger of injuries to fingers and hands if caught in the rotation of the cutting line;
- danger of injuries to feet if struck by the cutting line,
- stones and soil projections.

2.6 BATTERY / BATTERY CHARGER

IMPORTANT *The following safety instructions are in addition to the safety requirements provided in the specific battery and battery charger manual delivered with this machine.*

- Only use battery chargers recommended by the manufacturer to recharge batteries. An inadequate battery charger may cause electric shock, overheating or corrosive liquid to leak from the battery.
- Use only batteries specifically designed for your power tool. The use of other batteries may cause injuries and fire risks.

2.7 ENVIRONMENTAL PROTECTION

- Comply with local regulations for the disposal of packaging, deteriorated parts or any elements with a strong environmental impact; this waste must not be disposed of as normal waste, it must be separated and taken to specified waste disposal centres where the material will be recycled.
- Comply with local regulations for the disposal of waste materials.
- When the machine is withdrawn from service, do not dump it in the environment, but take it to a waste disposal facility in accordance with the local regulations in force.

Do not throw electrical equipment away with domestic waste. According to the European Directive 2012/19/EU on electrical and electronic equipment waste and its implementation in compliance with national standards, old electrical equipment must be collected separately, for eco-compatible recycling. If electrical equipment is disposed of in a landfill or in the ground, the harmful substances can reach the water table and enter the food chain, damaging your health and well-being. For further information on the disposal of this product, contact

your dealer or a domestic waste collection service.

At the end of their working life, dispose of batteries paying due attention to the environment. Batteries contain material classified as hazardous for you and the environment. They must be removed and disposed of separately at a facility that accepts lithium-ion batteries.

Separate waste collection of the products and packaging used allows the materials to be recycled and reused. Reuse of recycled materials help to prevent environmental pollution and reduces the demand for raw materials.

3. GETTING TO KNOW THE MACHINE

3.1 DESCRIPTION OF THE MACHINE AND PLANNED USE

This machine is a garden tool and more precisely a battery-powered portable grass /grass edge trimmer.

The machine is essentially composed of a motor which, employing a transmission shaft, drives a cutting line head.

The cutting head works on a surface that is approximately parallel to the ground (in case of use as grass trimmer) or approximately perpendicular to the ground (in case of use as grass edge trimmer.

The operator can operate the machine and use the main controls, always keeping a safe distance from the cutting head.

3.1.1 Intended use

This machine was designed and manufactured for:

- cutting grass and non woody vegetation (e.g. around the borders of flowerbeds, plants, walls, fences and small lawns);
- tidy up the cutting after using a mower;
- being used by one operator.

3.1.2 Improper use

Any other usage not in keeping with the above-mentioned ones may be hazardous and harm persons and/or damage things. Examples of improper use may include, but are not limited to:

- using the machine for sweeping, tilting the cutting line head. The power of the motor could throw objects and small stones 15 metres or more, causing damage or injury to people;
- trimming hedges or other jobs in which the cutting head is not used at ground level;
- cutting and chopping trees, bushes and flowers;
- using the machine for cutting non-plant material;
- using the machine with the cutting head above the operator's belt level;
- using the machine in public gardens, parks, sports centres, on roadways, fields and woods;
- using cutting head other than those listed in the "Technical Data" table. Serious injury and wound hazard.
- using the machine by more than one person.

IMPORTANT *Improper use of the machine will invalidate the warranty, waive the Manufacturer from all liability, and the user will consequently be liable for all and any damage or injury to himself or others.*

3.1.3 User types

This machine is intended for use by consumers, i.e. non-professional operators. The machine is intended for "DIY" use only.

3.2 MAIN COMPONENTS (Fig.1)

A. **Power unit**: it drives the cutting head through a transmission shaft.
B. **Rod**: it connects the rear hand grip to the power unit.
C. **Cutting line head**: the element designed to cut the vegetation.
  1. **Cutting line head**: nylon line cutting head.
D. **Cutting head guard**: it is a safety device which prevents objects drawn

up by the cutting head from being hurled away from the machine.

E. **Front hand grip**: semi-circular shaped, it is used to handle the machine.
F. **Rear hand grip**: used to handle the machine and equipped with the main on/off/acceleration control buttons.
G. **Battery** *(if it is not supplied with the machine, see chapter 15 "accessories on request")*: device that supplies electric current to the tool; its specifications and regulations for use are described in a specific manual.
H. **Battery charger** *(if it is not supplied with the machine, see chapter 15 "accessories on request")*: device used to recharge the battery.

3.3 PRODUCT IDENTIFICATION LABEL (Fig.1)

1. CE Conformity marking
2. Name and address of Manufacturer
3. Sound power level
4. Type of machine
5. Power voltage and frequency
6. Serial number
7. Article code
8. Year of manufacture

Write the identification data of the machine in the specific space on the label on the back of the cover page.

IMPORTANT *Quote the information on the product identification label whenever you contact an Authorised Service Dealer.*

IMPORTANT *The example of the Declaration of Conformity is provided on the last pages of the manual.*

3.4 SAFETY SIGNS (Fig. 2)

The machine has various symbols on it. Meaning of symbols:

WARNING! DANGER! Failure to use this machine correctly can be hazardous for oneself and others

WARNING! Read the instruction manual before using the machine.

Anyone operating the machine under normal conditions for continuous daily use may be exposed to a noise level equal to or exceeding 85 dB (A). Use ear protection devices and goggles.

PROJECTION HAZARD! Be careful of flying debris projected by the cutting means, that can cause serious injuries to persons or damage to things.

PROJECTION HAZARD! People or pets must be kept at least 15 m away when using the machine!

Do not leave the machine in the rain (or in damp conditions).

Remove the battery before performing any inspections, cleaning or maintenance/ adjustment interventions on the machine:

IMPORTANT *Any damaged or illegible decals must be replaced. Order replacement decals from an Authorised Service Dealer.*

4. ASSEMBLY

IMPORTANT *The safety regulations to follow are described in chap. 2. Strictly comply with these instructions to avoid serious risks or dangers.*

For storage and transport purposes, some components of the machine are not installed in the factory and have to be assembled after unpacking. Follow the instructions below.

⚠ ***Unpacking and completing the assembly should be done on a flat and stable surface, with enough space for machine handling and its packaging, always making use of suitable equipment.***

Do not use the machine until all the instructions provided in the "ASSEMBLY" section have been carried out.

4.1 UNPACKING

1. Carefully open the packaging, paying attention not to lose components.
2. Consult the documentation in the box, including these instructions.
3. Remove all the unassembled parts from the box.
4. Remove the machine from the box.
5. Dispose of the box and packaging in compliance with local regulations.

⚠ ***Before assembling, make sure the battery is not inserted in its housing.***

4.2 FITTING THE FRONT HAND GRIP

1. Insert the front hand grip (Fig. 3.A) on the pre-assembled support (Fig. 3.B), with the seat of the screw on the right side.
2. Insert the screw and tighten the knob, without overtightening it (Fig. 3.C).
3. Adjust the grip in the most ergonomic position for the operator (chapter 6.1.2).
4. Tighten the knob.

4.3 FITTING THE GUARD ON THE CUTTING HEAD

⚠ ***Wear protective gloves.***

1. Place the guard (Fig.4.A) on the holes on the power unit base (Fig. 4.B).
2. Secure the guard (Fig. 4.A) fully tightening the screws (Fig. 4.C).

NOTE *On the guard of the cutting head there is the following symbol:*

Indicates the rotation direction of the cutting head.

4.4 FITTING THE INDICATOR CUTTING LIMIT

– Insert and fasten the two ends of the cutting limit indicator (Fig. 5.A) in their respective holes on the power unit (Fig.5.B).

5. CONTROLS

5.1 THROTTLE CONTROL LEVER

It allows to start/stop the machine and simultaneously engages/disengages the cutting head.

The throttle control lever (Fig. 6.B) can only be operated if the throttle safety lever/button is pressed at the same time (Fig. 6.B).

For machine start up:
– Simultaneously push the regulator control lever and safety lever.

⚠ ***Starting the machine causes the cutting head to start rotating at the same time.***

The machine stops automatically as the throttle control lever is released.

5.2 THROTTLE SAFETY LEVER/BUTTON

The throttle safety lever/button (Fig. 6.B) allows the throttle control lever to be used (Fig. 6.A).

6. USING THE MACHINE

IMPORTANT *The safety regulations to follow are described in chap. 2. Strictly comply with these instructions to avoid serious risks or dangers.*

6.1 PREPARATION

Place the machine in a stable horizontal position on the ground;

Make sure the battery is not inserted in its housing.

6.1.1 Checking and recharging the battery (Fig. 7)

Before each use check the battery charge status according to the instructions in the battery booklet.

6.1.2 Regulating the front hand grip

1. Remove the knob (Fig. 8.A).
2. Move and/or direct the hand grip in the most ergonomic position for

the operator; it is possible to direct the hand grip only forwards.
3. Tighten the knob (Fig. 8.A).

6.1.3 Rod length regulation

For model LT 20 Li A
1. Push the button (Fig. 9.A).
2. Pull or push the rod (Fig. 9.B) until it reaches the desired length.
3. When the adjustment is complete, release the button until the rod is firmly locked into the desired position.

For model LT 20 Li S
1. Open the clamping hook (Fig. 10.A)
2. Pull or push the rod (Fig. 10.B) until it reaches the desired length.
3. When the adjustment is complete, close the clamping hook. The rod should be firmly locked into the desired position.

6.1.4 Tilting the cutting head

For model LT 20 Li A
1. Push the pedal (Fig. 11.A)
2. Tilt the cutting device (Fig. 11.B) into position.
3. Make sure the cutting head is firmly locked.

For model LT 20 Li S
1. Push the two side buttons (Fig. 12.A)
2. Tilt the cutting device (Fig. 12.B) into position.
3. Make sure the cutting head is firmly locked.

6.1.5 Aligning the cutting head (Mod. LT 20 Li S)

The cutting head orientation allows the switch from grass trimmer mode to grass edge trimmer mode, and vice versa, whilst working.

How to work in grass trimmer mode:
1. Press the button (Fig. 13.A);
2. Rotate the cutting head (Fig. 13.B) by 90° to the left, making sure it stays locked in position.

⚠ ***Perform this operation when the machine is turned off and the cutting head is still.***

6.2 SAFETY CHECKS

⚠ ***Always carry out the safety checks before use.***

6.2.1 General check

Object	Result
Hand grips (Fig. 1.E)	Clean, dry and fixed firmly to the machine.
Cutting head guard (Fig. 1.D)	Correctly and securely fitted to the machine, not worn/deteriorated or damaged.
Screws on the machine	Correctly tightened (not loose)
Cutting head (Fig. 1.C)	Clean, not damaged or worn
Battery (Fig. 1.G)	No damage to the casing, no liquid leakage
Cooling air ducts (par. 7.3)	Not clogged
Machine	No signs of damage or wear. No abnormal vibrations. No abnormal sound
Throttle control lever (Fig. 6.A), throttle safety lever/button (Fig. 6.B)	The levers must move freely, not be forced. and when released should return automatically and rapidly to the neutral position.

6.2.2 Machine operating test

Action	Result
1. Start the machine (par. 6.3); 2. Release the throttle control lever (Fig. 6.A) and throttle safety lever/button (Fig. 6.B).	1. The cutting head must not move. 2. Controls should return automatically and rapidly to the neutral position and the cutting head should stop.
Press only the throttle control lever (Fig. 6.A).	The throttle control lever remains blocked.

⚠ ***If any of the results fail to match the indications provided in the tables below, do not use the machine! Take it to an authorised service dealer to be checked and repaired if necessary.***

6.3 START-UP

⚠ ***Starting the machine causes the cutting head to start rotating at the same time.***

NOTE *Operate the machine only on a firm, level surface.*

1. Make sure the cutting head is not touching the ground or any other object.
2. Fit the battery (Fig. 14.A) inside its housing pressing down until you hear it clicks firmly into position and assure the electrical contact.
3. Take a firm and balance position.
4. Simultaneously activate the throttle control lever (Fig. 6.A) and throttle safety lever/button (Fig. 6.B).

NOTE *At every start up new line is automatically released (par. 6.4.2).*

6.4 OPERATION

NOTE *Before tackling a cutting/trimming job for the first time, get to know the machine, learn the most suitable cutting techniques, grip the machine firmly and make the movements required by the job.*

⚠ ***During use, always hold the machine firmly with two hands, using the cutting unit below the operator's belt level.***

NOTE *During use, the battery is protected against total drainage with a protective device that switches off the machine and stops it from working.*

NOTE *Battery power reserve (and therefore the cuttable vegetation area before recharging is required) depends on many factors described in (par. 7.2.1).*

NOTE *After one minute of inactivity, if turned on, the machine will automatically switch off.*

6.4.1 Work techniques

⚠ ***Use ONLY nylon lines. The use of metal lines, plasticised metal lines and/or lines that are not suitable for the head can cause serious injuries and wounds.***

a. Cutting in motion (Scything)
- Make sure the cutting head is in grass trimmer mode (par. 6.1.5);
- proceed at a regular pace, with a circular motion similar to a traditional scythe, without tilting the cutting line head during the operation (Fig. 15).

First try cutting at the right height in a small area, so as to then achieve a uniform cutting height keeping the cutting line head at a constant distance from the ground.

For heavier cutting it can be useful to tilt the cutting line head to the left by about 30°.

⚠ ***Do not work in this way if there is the possibility of causing objects to be thrown, which could harm people, animals or cause damage.***

b. Precision cutting (Trimming)
Keep the machine slightly tilted so that the lower part of the cutting line head does not touch the ground and the cutting line is at the required point, always keeping the cutting head at a distance from the operator.

c. Cutting near fences/foundations
- Adjust the cutting limit indicator (if applicable, par. 6.1.4);
- move the cutting line head slowly towards fences, posts, rocks, walls, etc. without hitting them hard (Fig. 16).

If the line strikes a solid object it could break or become worn; if it gets tangled in a fence it could break suddenly.
In any case, cutting around pavements, foundations, walls, etc. can cause greater wear than normal to the line.

d. Cutting around trees
- Adjust the cutting limit indicator (if applicable, par. 6.1.4);
- walk round the tree from left to right, approaching the trunks slowly so as not to strike the tree with the line and keeping the cutting line head tilted forward slightly.

Remember that the nylon line could lop off or damage small shrubs and that the impact of the nylon line against the trunk of bushes or trees with soft bark could seriously damage the plant.

6.4.2 Adjusting the length of the cutting line head during work

Head line length should be adjusted:
- When the line is consumed and becomes shorter.
- When motor rotation seems higher than normal
- When cutting efficiency seems reduced.

• Automatic line release
This machine is fitted with an automatic line release head.
To release new line:

1. Stop the machine (par. 6.6);
2. Wait for two seconds and restart the machine.

The released line is about 6.35 mm.
Repeat the procedure until the line length reaches the line cutting knife that will cut any exceeding length.

- **Manual line release**

To release new line:
1. Stop the machine (par. 6.6).
2. Remove the battery from its housing (par 7.2.2).
3. Press the button on the line head (Fig. 17.A) and, at the same time, pull the line manually for the length that is necessary to reach the line cutting knife (Fig. 17.B).
4. Bring back the machine to the working position.
5. Fit the battery inside its housing (Fig. 14.A).

6.5 ADVICE FOR OPERATION

During use it is best to periodically remove weeds that wrap around the machine to avoid the motor overheating (Fig. 1.A), due to grass getting caught under the cutting head guard (Fig. 1.D).

Proceed as follows:
- stop the machine (par. 6.6);
- remove the battery (par. 7.2.2);
- wear work gloves;
- remove the caught-up grass with a screwdriver to allow the motor to be properly cooled.

6.6 STOP

To stop the machine:
1. Release the throttle control lever (Fig. 6.A);.
2. Wait until the cutting head stops.

⚠ ***When you have stopped the machine, it will take a few seconds for the cutting head to stop.***

IMPORTANT *Always stop the machine when moving between work areas.*

6.7 AFTER USE

- Remove the battery from its housing and recharge it (par 7.2.2).
- Allow the motor to cool before storing in an enclosed space.
- Clean (par. 7.3).
- Make sure there are no loose or damaged components. If necessary, replace the damaged components and tighten any screws or loose bolts or contact the authorised service dealer.

IMPORTANT *Always remove the battery (par 7.2.2) whenever you leave the machine unused or unattended.*

7. MAINTENANCE

7.1 GENERAL INFORMATION

IMPORTANT *The safety regulations to follow are described in chap. 2. Strictly comply with these instructions to avoid serious risks or dangers.*

⚠ ***Before performing any inspections, cleaning or maintenance/ adjustment on the machine:***
- ***Stop the machine.***
- ***Remove the battery from its housing and recharge it (para. 7.2.2) (never leave the battery inserted or within the reach of children or unauthorised persons).***
- ***Allow the motor to cool before storing in an enclosed space.***
- ***Use suitable clothing, protective gloves and goggles.***
- ***Read the relevant instructions.***

IMPORTANT *Any maintenance and adjustment operations not described in this manual must be carried out by your dealer or Authorised Service Dealer.*

7.2 BATTERY

7.2.1 Battery power reserve

Battery power reserve (and therefore the cuttable vegetation area before recharging is required) mainly depends on:
a. environmental factors, that cause higher energy requirements:
- cutting high, wet vegetation;

b. operator behaviour that should be avoided:
- switching the machine on and off frequently whilst working;
- adopting a cutting technique that is unsuitable for the work to be performed (par. 6.4.1).

To optimise battery power reserve it is always recommended to:
- cut the grass when dry;
- use the most appropriate technique for the work to be performed (par. 6.4.1).

If the need arises to use the machine for sessions which exceed the capability of a standard battery, it is possible to:
- purchase a second standard battery to immediately replace the discharged battery, without compromising the continuity of operations;
- purchase a battery with an extended power reserve compared to the standard version (par. 13.1).

7.2.2 Battery removal and recharging (Fig.18÷21)

Fully charge the battery according to the instructions in the battery/battery charger booklet.

NOTE *The battery is equipped with a guard that inhibits recharging if the environmental temperature is not between 0 and +45 °C.*

NOTE *The battery can be recharged at any time, even partially, with no risk of damaging it.*

7.3 CLEANING THE MACHINE AND THE MOTOR

- Always clean the machine after use with a damp cloth dipped in neutral detergent.
- Remove all traces of humidity using a soft damp cloth. Humidity can generate risks of electric shocks.
- Do not use aggressive detergents or solvents to clean the plastic parts or hand grips.
- To reduce fire hazards, keep the grass trimmer and, in particular, the motor free of grass, leaves, or excessive grease.
- To avoid overheating and damage to the motor or the battery, always keep the cooling air vents clean and free of debris.
- Do not spray water onto the motor and electrical components and prevent them from getting wet.

7.4 NUTS AND BOLTS

- Keep all nuts, bolts and screws tight to ensure the equipment is in a safe working condition.
- Check regularly that the handles are fixed firmly.

7.5 CUTTING HEAD

⚠ ***Do not touch the cutting head until the battery has been removed and the cutting head is completely stationary.***

IMPORTANT *Cutting head displaying the code indicated on the Technical Data table should be used on this machine.*

Given product evolution, the cutting head mentioned in the "Technical Data" table may be replaced in time with others having similar interchangeable and operating safety features.

7.5.1 Replacing the reel of the cutting line head

1. Press the two side tabs (Fig. 22.A) and remove the cover (Fig. 22.B);
2. Remove the reel (Fig. 22.C);
3. Insert the new reel (Fig. 23.A), making sure the line extremity exits the head hole (Fig. 23.B);
4. Refit the cover (Fig. 23.C) insert the two side tabs (Fig. 23.D) in the cutting line head openings (Fig. 23.E).

7.5.2 Replacing the cutting line head

1. Remove the reel (par. 7.5.1).
2. Remove the line left inside.
3. Only use a line with diameter of 1.65 mm and cut 3 m of length.
4. Insert one line extremity in the hole located inside the reel (Fig. 24.A).
5. Roll the line in the clockwise direction as specified by the arrows (Fig. 24.B) and let it stick out of about 15 cm from the reel.
6. Connect it with one of the anchorage sites (Fig. 24.C) on the reel.
7. Reposition the reel and reassemble the cover (cap 7.5.1).

7.6 SHARPENING THE LINE CUTTING KNIFE

1. Remove the line cutting knife (Fig. 25.A) from the cutting head guard (Fig. 25.B) unscrewing the screws (Fig. 25.C).
2. Fix the line cutting knife in a vice and sharpen it using a flat file, being careful to retain the original cutting angle.
3. Re-assemble the line cutting knife (Fig. 25.A) on the cutting head guard (Fig. 25.B).

8. STORAGE

IMPORTANT *The safety regulations to follow are described in chap. 2. Strictly comply with these instructions to avoid serious risks or dangers.*

8.1 STORING

When the machine is to be stored away:
1. Remove the battery from its housing and recharge it (par 7.2.2).
2. Allow the motor to cool before storing in an enclosed space.
3. Clean (par. 7.3);
4. Make sure there are no loose or damaged components. If necessary, replace any damaged components and tighten any screws and loose bolts or contact an authorised service dealer.

Store the machine:
1. In a dry place.
2. Protected from inclement weather.
3. In a place out of children's reach.
4. Making sure that keys or tools used for maintenance are removed.

8.2 STORING THE BATTERY

If the battery is not charged for a long period of time, it must be kept in a cool, shaded place without humidity, with environmental temperature between 0~45°C.

NOTE *If unused for any length of time, recharge the battery every two months to prolong its working life.*

9. HANDLING AND TRANSPORTATION

Whenever the machine is to be handled or transported you must:
1. Stop the machine (par. 6.6).
2. Make sure that all moving parts have come to a complete stop.
3. Remove the battery from its housing and recharge it (par. 7.2.2).
4. Wear heavy work gloves.
5. Only hold the machine using the hand grips and position the cutting head in the opposite direction to that used during operations.
6. Make sure that machine movements do not cause damage or injuries.

When transporting the machine on a vehicle, always:
1. Position it so that it can not cause a hazard for anybody.
2. Fasten the machine securely with cables or chains.

10. ASSISTANCE AND REPAIRS

This manual provides all the necessary information to run the machine and for correct basic maintenance operations which can be performed by the user. Any regulations and maintenance operations not described herein must be carried out by your Dealer or Authorised Service Dealer. Any operations performed in unauthorised centres or by unqualified persons will totally dealers the Warranty and all obligations and responsibilities of the Manufacturer.

- Non-genuine spare parts and accessories are not approved. Use of non-genuine spare parts and accessories cause the warranty to expire.
- Original spare parts are supplied by authorised Dealers and by Authorised Service Dealers.

11. WARRANTY

The warranty conditions are intended for consumers only, i.e. non-professional operators. The warranty covers all material quality and manufacturing defects recognised during the warranty period by your Dealer or Authorised Service Dealer.
The warranty is restricted to the repair or replacement of components recognised as faulty.
The warranty only applies to machines subjected to regular maintenance.
The warranty does not cover damages resulting from:
- Failure to become familiar with the documentation accompanying the machine (Instruction manuals).
- Professional use.
- Carelessness, negligence.
- External causes (lightning, impact, presence of foreign bodies inside the machine) or incidents.
- Incorrect use or assembly are prohibited by the manufacturer.
- Poor maintenance.
- Modification to the machine.
- Use of non-genuine spare parts (adaptable parts).
- Use of accessories not supplied or approved by the manufacturer.

The warranty does not cover:

- The maintenance operations (described in the instruction manual).
- Normal wear and tear of consumables.
- Normal wear and tear.
- Deterioration in the appearance of the machine due to use.
- Any ancillary expenses related to the enforcement of the warranty, such as costs incurred to travel to the user's location, transfer of the machine to the Dealer, rental of replacement equipment or calling of independent enterprises to perform maintenance work.

The user is protected by his or her own national legislation. The user's rights under the national laws or his or her own country are not in any way restricted by this warranty.

12. TROUBLESHOOTING

PROBLEM	PROBABLE CAUSE	SOLUTION
1. The cutting head is stationary and the machine does not start when the throttle control lever and throttle safety lever/ button are engaged	Battery is not inserted or is inserted incorrectly	Make sure that the battery is inserted well (Fig. 14.A)
	Low battery	Check the battery status and recharge if necessary (par. 7.2.1)
	Defective throttle control lever/ throttle safety lever	Do not use the machine. Immediately turn off the machine, remove the battery and contact an authorised service dealer.
	Machine damaged	Do not use the machine. Immediately turn off the machine, remove the battery and contact an authorised service dealer.
2. Motor overheating	Grass caught under the cutting means guard	Remove caught grass (par. 6.5)
3. Grass accumulates around the power unit housing and the cutting line head	Too high grass is being cut close to the ground	Cut tall grass with a top down movement to avoid accumulations.
4. The line is not released when the automatic release is turned on	The line is stuck to itself	Lubricate with silicone spray
	Not enough line on the reel or reel empty	Replace the reel (chap. 7.5.1) or the line (chap. 7.5.2)
	The line is worn and too short	Release the line manually (chap. 6.4.2.)
	The line is tangled on the reel or broken	Remove the line from the reel and rewind it (chapter 7.5.1)
5. The cutting head comes into contact with a foreign body.	-	- Turn off the machine - Remove the battery and: - Inspect for damage; - Check for and tighten any loose parts; - Have all replacements or repairs carried out by an authorised service dealer.
6. Excessive noise and/or vibration is experienced whilst working	Loose or damaged parts.	- Turn off the machine - Remove the battery and: - Inspect for damage; - Check for and tighten any loose parts; - Have all replacements or repairs carried out by an authorised service dealer.
7. The machine gives off smoke whilst working	Machine damaged	Do not use the machine. Immediately turn off the machine remove the battery and contact an authorised service dealer.
8. Battery power reserve is low	Severe working conditions requiring greater current absorption	Optimise operations (par. 7.2.1)
	Battery is insufficient for operating requirements	Use a second battery or extended battery (par. 15.1)
	Decrease in battery capacity	Purchase a new battery

PROBLEM	PROBABLE CAUSE	SOLUTION
9. The battery charger is not recharging the battery	Battery is not correctly inserted in the battery charger	Check it is correctly inserted (par. 7.2.3)
	Unsuitable environmental conditions	Recharge the battery in places with suitable temperatures (see battery/ battery charger instruction manual)
	Dirty contacts	Clean the contacts
	The battery charger is not energised	Check it is plugged in and the power socket is energised
	Faulty battery charger	Replace with an original spare part
	-	If the problem persists, refer to the battery/battery charger manual

If problems persist after having performed the operations described above, contact your dealer, or an authorised service dealer.

13. ACCESSORIES ON REQUEST

13.1 BATTERIES

Different capacity batteries are available to suit specific operating requirements (Fig. 26). The list of approved batteries for this machine are found in the "Technical Data" table.

13.2 BATTERY CHARGER

Device used to recharge the battery (Fig. 27)

DICHIARAZIONE CE DI CONFORMITÁ (Istruzioni Originali)

(Direttiva Macchine 2006/42/CE, Allegato II, parte A)

1. **La Società**: ST. S.p.A. – Via del Lavoro, 6 – 31033 Castelfranco Veneto (TV) – Italy

2. Dichiara sotto la propria responsabilità, che la macchina: Tagliaerba/tagliabordi portatile, taglio erba

   a) Tipo / Modello Base — TR 20 Li A, TR 20 Li S

   b) Mese/Anno di costruzione

   c) Matricola

   d) Motore — batteria

3. É conforme alle specifiche delle direttive:

   - MD: 2006/42/EC
     e) Ente Certificatore: /
     f) Esame CE del tipo: /

   - OND: 2000/14/EC, ANNEX VI, proc.1- 2005/88/EC
     D. Lgs. 262/2002, ANNEX VI, proc. 1 (Italy)
     e) Ente Certificatore: N° 0905 Intertek Deutschland GmbH
     Stangenstraße 1, 70771 Leinfelden-Echterdingen, Germany

   - EMCD: 2014/30/EU
   - RohS II: 2011/65/EU - 2015/863/EU

4. Riferimento alle Norme armonizzate:

   EN 60335-1:2012+A11:2014+A13:2017+A1:2019+A2:2019+A14:2019
   EN 50636-2-91:2014
   EN IEC 63000:2018
   EN 55014-1:2017
   EN 55014-2:2015

g) Livello di potenza sonora misurato	87,5	dB(A)
h) Livello di potenza sonora garantito	92	dB(A)
i) Ampiezza di taglio	25	cm

n) Persona autorizzata a costituire il FascicoloTecnico:

ST. S.p.A.
Via del Lavoro, 6
31033 Castelfranco Veneto (TV) - Italia

o) Castelfranco V.to, 05.08.2020

CEO Stiga Group
Sean Robinson

EXAMPLE

FR (Traduction de la notice originale)

Déclaration CE de Conformité
(Directive Machines 2006/42/CE, Annexe II, partie A)
1. La Société
2. Déclare sous sa propre responsabilité que la machine : Coupe-herbe / Coupe-bordures - coupe du gazon
a) Type / Modèle de Base
b) Mois / Année de construction
c) Série
d) Motor: accu
3. Est conforme aux prescriptions des directives :
e) Organisme de certification
f) Examen CE du Type
4. Renvoi aux Normes harmonisées
g) Niveau de puissance sonore mesuré
h) Niveau de puissance sonore garanti
i) Largeur de coupe
n) Personne habilitée à établir le Dossier Technique :
o) Lieu et Date

EN (Translation of the original instruction)

EC Declaration of Conformity
(Machine Directive 2006/42/EC, Annex II, part A)
1. The Company
2. Herby declares under its own responsibility that the machine: lawn/edge trimmer - grass cutting
a) Type / Base Model
b) Month / Year of manufacture
c) Serial number
d) Motor: battery-operated
3. Conforms to directive specifications:
e) Certifying body
f) EC examination of Type
4. Reference to harmonised Standards
g) Sound power level measured
h) Sound power level guaranteed
i) Range of cut
n) Person authorised to create the Technical Folder:
o) Place and Date

DE (Übersetzung der Originalbetriebsanleitung)

EG-Konformitätserklärung
(Maschinenrichtlinie 2006/42/EG, Anhang II, Teil A)
1. Die Gesellschaft
2. Erklärt auf eigene Verantwortung, dass die Maschine: Rasentrimmer/Rasenkantenschneider, rasenschnitt
a) Typ / Basismodell
b) Monat / Baujahr
c) Seriennummer
d) Motor: Batterie
3. Den Anforderungen der folgenden Richtlinien entspricht:
e) Zertifizierungsstelle
f) EG-Baumusterprüfung
4. Bezugnahme auf die harmonisierten Normen
g) Gemessener Schallleistungspegel
h) Garantierter Schallleistungspegel
i) Schnittbreite
n) Zur Verfassung der technischen Unterlagen befugte Person:
o) Ort und Datum

NL (Vertaling van de oorspronkelijke gebruiksaanwijzing)

EG-verklaring van overeenstemming
(Richtlijn Machines 2006/42/CE, Bijlage II, deel A)
1. Het bedrijf
2. Verklaart onder zijn eigen verantwoordelijkheid dat de machine: Graskantenrijder - Grasmaaier
a) Type / Basismodel
b) Maand / Bouwjaar
c) Serienummer
d) Motor: accu
3. Voldoet aan de specificaties van de richtlijnen:
e) Certificatie-instituut
f) EG-onderzoek van het Type
4. Verwijzing naar de Geharmoniseerde normen
g) Gemeten niveau van geluidsvermogen
h) Gegarandeerd niveau van geluidsvermogen
i) Snijbreedte
n) Bevoegd persoon voor het opstellen van het Technisch Dossier
o) Plaats en Datum

ES (Traducción del Manual Original)

Declaración de Conformidad CE
(Directiva Máquinas 2006/42/CE, Anexo II, parte A)
1. La Empresa
2. Declara bajo su propia responsabilidad que la máquina: Cortacésped/Cortabordes - corte hierba
a) Tipo / Modelo Base
b) Mes / Año de fabricación
c) Matrícula
d) Motor: batería
3. Cumple con las especificaciones de las directivas:
e) Ente certificador
f) Examen CE del Tipo
4. Referencia a las Normas armonizadas
g) Nivel de potencia sonora medido
h) Nivel de potencia sonora garantizado
i) Amplitud de corte
n) Persona autorizada a realizar el Manual Técnico:
o) Lugar y Fecha

PT (Tradução do manual original)

Declaração CE de Conformidade
(Diretiva de Máquinas 2006/42/CE, Anexo II, parte A)
1. A Empresa
2. Declara sob a própria responsabilidade que a máquina: aparador de relva/cortadora de cantos - corte da relva
a) Tipo / Modelo Base
b) Mês / Ano de fabrico
c) Matrícula
d) Moto: Bateria
3. É conforme às especificações das diretivas:
e) Órgão certificador
f) Exame CE do Tipo
4. Referência às Normas harmonizadas
g) Nível medido de potência sonora
h) Nível garantido de potência sonora
i) Amplitude de corte
n) Pessoa autorizada a elaborar o Caderno Técnico
o) Local e Data

EL (Μετάφραση του πρωτοτύπου των οδηγιών χρήσης)

ΕΚ-Δήλωση συμμόρφωσης
(Οδηγία Μηχανών 2006/42/CE, Παράρτημα II, μέρος A)
1. Η Εταιρία
2. Δηλώνει υπεύθυνα ότι η μηχανή: Χλοοκοπτικό/Κόφτης άκρων - κοπή της χλόης
a) Τύπος / Βασικό Μοντέλο
b) Μήνας / Έτος κατασκευής
c) Αριθμός μητρώου
d) Κινητήρας: μπαταρία
3. Συμμορφώνεται με τις προδιαγραφές της οδηγίας:
e) Οργανισμός πιστοποίησης
f) Εξέταση CE του Τύπου
4. Αναφορά στους Κανονισμούς εναρμόνισης
g) Στάθμη μέτρησης ακουστικής ισχύος
h) Στάθμη εγγυημένης ακουστικής ισχύος
i) Εύρος κοπής
n) Εξουσιοδοτημένο άτομο για την κατάρτιση του Τεχνικού Φυλλαδίου:
o) Τόπος και Χρόνος

TR (Orijinal Talimatların Tercümesi)

AT Uygunluk Beyanı
(2006/42/CE Makine Direktifi, Ek II, bölüm A)
1. Şirket
2. Şahsi sorumluluğu altında aşağıdaki makinenin: beslemeli çim/kenar kesme – çim kesimi
a) Tip / Standart model
b) Üretimin Ay / yıl
c) Sicil numarası
d) Motor: batarya
3. Aşağıdaki direktiflerin özelliklerine uygun olduğunu beyan etmektedir:
e) Sertifikalandıran kurum
f) ... Tipi CE incelemesi
4. Harmonize standartlara atıf
g) Ölçülen ses güç seviyesi
h) Garanti edilen ses güç seviyesi
i) Kesim genişliği
n) Teknik Dosyayı oluşturmaya yetkili kişi:
o) Yer ve Tarih

MK (Превод на оригиналните упатства)

Декларација за усогласеност со ЕУ
(Директива за машини 2006/42/CE, Анекс II, дел А)
1. Компанијата
2. изјавува со целосна лична одговорност дека следната машина: Тревокосачка со оператор на нозе / косење трева
а) Тип / основен модел
б) Месец / Година на производство
в) етикета
г) мотор: акумулатор
3. Усогласено со спецификациите според директивите:
д) тело за сертификација
ѓ) тест CE за типот
4. Референци за усогласени нормативи
е) Акустички притисок
ж) измерено ниво на звучна моќност
з) Ниво на гарантирана звучна моќност
н) овластено лице за составување на Техничката брошура
о) место и датум

NO (Oversettelse av orginal bruksanvisning)

EF- Samsvarserklæring
(Maskindirektiv 2006/42/EF, Vedlegg II, del A)
1. Firmaet
2. Erklærer på eget ansvar at maskinen: trimmer/kantklipper, gressklipping
a) Type / Modell
b) Måned / Byggeår
c) Serienummer
d) Motor: batteri
3. Oppfyller kravene i direktivene:
e) Sertifiseringsorgan
f) EF-typeprøving
4. Henvisning til harmoniserte standarder
g) Målt lydeffektnivå
h) Garantert lydeffektnivå
i) Klippebredde
n) Person som har fullmakt til å utferdige teknisk dokumentasjon:
o) Sted og dato

SV (Översättning av bruksanvisning i original)

EG-försäkran om överensstämmelse
(Maskindirektiv 2006/42//EG, bilaga II, de la)
1. Företaget
2. Försäkrar på eget ansvar att maskinen: gräsklippare/kantskärare, gräsklippning
a) Typ / Basmodell
b) Månad / Tillverkningsår
c) Serienummer
d) Motor: batteri
3. Överensstämmer med föreskrifterna i direktivet
e) Intygsorgan_ Anmält organ
f) EG typgodkännande
4. Referens till harmoniserade standarder
g) Uppmätt ljudeffektnivå
h) Garanterad ljudeffektnivå
i) Skärbredd
n) Auktoriserad person för upprättandet av den tekniska dokumentationen:
o) Ort och datum

DA (Oversættelse af den originale brugsanvisning)

EF-overensstemmelseserklæring
(Maskindirektiv 2006/42/EF, bilag II, del A)
1. Firmaet
2. Erklærer på eget ansvar, at maskinen: græstrimmer/kantklipper, klipning af græsset
a) Type / Model
b) Måned / Konstruktionsår
c) Serienummer
d) Motor: batteri
3. Er i overensstemmelse med specifikationerne ifølge direktiverne:
e) Certificeringsorgan
f) EF-typeafprøvning
4. Henvisning til harmoniserede standarder
g) Målt lydeffektniveau
h) Garanteret lydeffektniveau
i) Klippebredde
n) Person, der har bemyndigelse til at udarbejde det tekniske dossier:
o) Sted og dato

FI (Alkuperäisten ohjeiden käännös)

EY-VAATIMUSTENMUKAISUUSVAKUUTUS
(Konedirektiivi 2006/42/EY, Liite II, osa A)
1. Yritys
2. Vakuuttaa omalla vastuullaan, että kone: ruohonleikkuri/reunaleikkuri- ruohonleikkuu
a) Tyyppi / Perusmalli
b) Kuukausi /Valmistusvuosi
c) Sarjanumero
d) Moottori : akku
3. On yhdenmukainen seuraavien direktiivien asettamien vaatimusten kanssa:
e) Sertifiointiyritys
f) EY-tyyppitarkastus
4. Viittaus harmonisoituihin standardeihin
g) Mitattu äänitehotaso
h) Taattu äänitehotaso
i) Leikkuuleveys
n) Teknisten asiakirjojen laatimiseen valtuutettu henkilö:
o) Paikka ja päivämäärä

CS (Překlad původního návodu k používání)

ES – Prohlášení o shodě
(Směrnice o Strojních zařízeních 2006/42/ES, Příloha II, část A)
1. Společnost
2. Prohlašuje na vlastní odpovědnost, že stroj: vyžínač/ořezávač- sekačka na trávu
a) Typ / Základní model
b) Měsíc / Rok výroby
c) Výrobní číslo
d) Motor: akumulátor
3. Je ve shodě s nařízeními směrnic:
e) Certifikační orgán
f) ES zkouška Typu
4. Odkazy na Harmonizované normy
g) Naměřená úroveň akustického výkonu
h) Zaručená úroveň akustického výkonu
i) Šířka řezání
n) Osoba autorizovaná pro vytvoření Technického spisu:
o) Místo a Datum

PL (Tłumaczenie instrukcji oryginalnej)

Deklaracja zgodności WE
(Dyrektywa maszynowa 2006/42/WE, Załącznik II, część A)
1. Spółka
2. Oświadcza na własną odpowiedzialność, że maszyna: kosiarka/przycinarka-cięcie trawy
a) Typ / Model podstawowy
b) Miesiąc / Rok produkcji
c) Numer seryjny
d) Silnik: akumulator
3. Spełnia podstawowe wymogi następujących Dyrektyw:
e) Jednostka certyfikująca
f) Badanie typu WE
4. Odniesienie do Norm zharmonizowanych
g) Zmierzony poziom mocy akustycznej
h) Gwarantowany poziom mocy akustycznej
i) Szerokość cięcia
n) Osoba upoważniona do zredagowania Dokumentacji technicznej:
o) Miejscowość i data

HU (Eredeti használati utasítás fordítása)

EK-megfelelőségi nyilatkozata
(2006/42/EK gépirányelv, II. melléklet "A" rész)
1. Alulírott Vállalat
2. Felelősségének teljes tudatában kijelenti, hogy az alábbi gép: fűnyíró/szegélynyíró-fűnyírás
a) Típus / Alaptípus
b) Hónap / Gyártás éve
c) Gyártási szám
d) Motor: akkumulátor
3. Megfelel az alábbi irányelvek előírásainak:
e) Tanúsító szerv
f) CE vizsgálat típusa
4. Hivatkozás a harmonizált szabványokra
g) Mért zajteljesítmény szint
h) Garantált zajteljesítmény szint
i) Vágási szélesség
n) Műszaki Dosszié szerkesztésére felhatalmazott személy:
o) Helye és ideje

RU (Перевод оригинальных инструкций)

Декларация соответствия нормам ЕС
(Директива о машинном оборудовании 2006/42/ЕС, Приложение II, часть А)
1. Предприятие
2. Заявляет под собственную ответственность, что машина: газонокосилка /триммер - стрижка газона
а) Тип / Базовая модель
b) Месяц /Год изготовления
c) Паспорт
d) Двигатель: батарея
3. Соответствует требованиям следующих директив:
e) Сертифицирующий орган
f) Испытание ЕС типового образца
4. Ссылки на гармонизированные нормы
g) Измеренный уровень звуковой мощности
h) Гарантируемый уровень звуковой мощности
i) Амплитуда кошения
n) Лицо, уполномоченное на подготовку технической документации:
o) Место и дата

HR (Prijevod originalnih uputa)

EK Izjava o sukladnosti
(Direktiva 2006/42/EZ o strojevima, dodatak II, dio A)
1. Tvrtka:
2. pod vlastitom odgovornošću izjavljuje da je stroj: trave/šišač travnih - košenje trave
a) Vrsta / Osnovni model
b) Mjesec / Godina proizvodnje
c) Matični broj
d) Motor: baterija
3. sukladan s temeljnim zahtjevima direktiva:
e) Certifikacijsko tijelo
f) Tipsko ispitivanje EZ
4. Primijenjene su slijedeće harmonizirane norme:
g) Izmjerena razina zvučne snage
h) Zajamčena razina zvučne snage
i) Širina rezanja
n) Osoba ovlaštena za pravljenje Tehničke datoteke:
o) Mjesto i datum

SL (Prevod izvirnih navodil)

ES izjava o skladnosti
(Direktiva 2006/42/ES) , priloga II, del A)
1. Družba
2. pod lastno odgovornostjo izjavlja, da je stroj: trat/tratnih robov, košnja trave
a) Tip / osnovni model
b) Mesec /Leto izdelave
c) Serijska številka
d) Motor: baterija
3. Skladen je z določili direktiv :
e) Ustanova, ki izda potrdilo
f) ES pregled tipa
4. Sklicevanje na usklajene predpise
g) Izmerjen nivo zvočne moči
h) Zagotovljen nivo zvočne moči
i) Obseg košnje
n) Oseba, pooblaščena za sestavo tehnične knjižice:
o) Kraj in datum

BS (Prijevod originalnih uputa)

EZ izjava o sukladnosti
(Direktiva o mašinama 2006/42/EZ, Prilog II, deo A)
1. Firma
2. Daje izjavu pod vlastitom odgovornošću da je mašina: trimer za travu/trimer makaze - Košenje trave
a) Tip / Osnovni model
b) Mjesec / Godina proizvodnje
c) Serijski broj
d) Motor: akumulator
3. sukladna s osnovnim zahtjevima direktive:
e) Certifikaciono tijelo
f) EZ ispitivanje tipa
4. Pozivanje na usklađene norme
g) Izmjereni nivo zvučne snage
h) Garantovani nivo zvučne snage
i) Širina košenja
n) Osoba ovlaštena za izradu tehničke brošure:
o) Mjesto i datum

SK (Preklad pôvodného návodu na použitie)

ES vyhlásenie o zhode
(Smernica o Strojných zariadeniach 2006/42/ES, Príloha II, časť A)
1. Spoločnosť
2. Vyhlasuje na vlastnú zodpovednosť, že stroj: vyžínač/orezávač okrajov -kosačka na trávu
a) Typ / Základný model
b) Mesiac / Rok výroby
c) Výrobné číslo
d) Motor: akumulátor
3. Je v zhode s nariadeniami smerníc:
e) Certifikačný orgán
f) Skúška typu ES
4. Odkaz na Harmonizované normy
g) Nameraná úroveň akustického výkonu
h) Zaručená úroveň akustického výkonu
i) Šírka kosenia
n) Osoba autorizovaná na vytvorenie Technického spisu:
o) Miesto a Dátum

RO (Traducerea manualului fabricantului)

CE -Declaratie de Conformitate
(Directiva Maşini 2006/42/CE, Anexa II, partea A)
1. Societatea
2. Declară pe propria răspundere că maşina: maşină de tuns iarba/trimmer - tăiat iarba
a) Tip / Model de bază
b) Luna /Anul de fabricație
c) Număr de serie
d) Motor: baterie
3. Este în conformitate cu specificaţiile directivelor:
e) Organism de certificare
f) Examinare CE de Tip
4. Referinţă la Standardele armonizate
g) Nivel de putere sonoră măsurat
h) Nivel de putere sonoră garantat
i) Lăţimea de tăiere
n) Persoană autorizată să întocmească Dosarul Tehnic
o) Locul şi Data

LT (Originalių instrukcijų vertimas)

EB atitikties deklaracija
(Mašinų direktyva 2006/42/CE, Priedas II, dalis A)
1. Bendrovė
2. Prisiima atsakomybę, kad įrenginys: krūmapjovė/kraštų krūmapjovė, žolės pjovimas
a) Tipas / Bazinis Modelis
b) Mėnuo / Pagaminimo metai
c) Serijos numeris
d) Variklis: baterija
3. Atitinka direktyvose pateiktas specifikacijas:
e) Sertifikavimo įstaiga
f) CE tipo tyrimas
4. Nuoroda į suderintas Normas
g) Išmatuotas garso galios lygis
h) Užtikrinamas garso galios lygis
i) Pjovimo plotis
n) Autorizuotas asmuo sudaryti Techninę Dokumentaciją:
o) Vieta ir Data

LV (Instrukciju tulkojums no oriģinālvalodas)

EK atbilstības deklarācija
(Direktīva 2006/42/EK par mašīnām, pielikums II, daļa A)
1. Uzņēmums
2. Uzņemoties par to pilnu atbildību, paziņo, ka mašīna: trimeris/malu trimeris -zāles pļaušana
a) Tips / Bāzes modelis
b) Mēnesis / Ražošanas gads
c) Sērijas numurs
d) Motors: akumulators
3. Atbilst šādu direktīvu prasībām:
e) Sertifikācijas iestāde
f) CE tipveida pārbaude
4. Atsauce uz harmonizētiem standartiem
g) Izmērītais skaņas intensitātes līmenis
h) Garantētais skaņas intensitātes līmenis
i) Pļaušanas platums
n) Pilnvarotais darbinieks, kas sagatavoja tehnisko dokumentāciju:
o) Vieta un datums

SR (Prevod originalnih uputstval)

EC deklaracija o usaglašenosti
(Direktiva o mašinama 2006/42/EC, Prilog II, deo A)
1. Preduzeće
2. Daje izjavu pod vlastitom odgovornošću da je mašina: trimer za travu/trimer - košenje trave
a) Tip / Osnovni model
b) Mesec /Godina proizvodnje
c) Serijski broj
d) Motor: akumulator
3. u skladu s osnovnim zahtevima direktiva:
e) Sertifikaciono telo
f) EC ispitivanje tipa:
4. Pozivanje na usklađene norme
g) Izmereni nivo zvučne snage
h) Garantovani nivo zvučne snage
i) Širina košenja....................
n) Osoba ovlašćena za sastavljanje tehničke brošure
o) Mesto i datum

BG (Превод на оригиналните инструкции)

ЕО декларация за съответствие
(Директива Машини 2006/42/ЕО, Приложение II, част А)
1. Дружеството
2. На собствена отговорност декларира, че машината: тревен тример/тример захранвани - рязане на трева
а) Вид / Базисен модел
б) Месец / година на производство
в) Сериен номер
г) Мотор: акумулатор
3. Е в съответствие със спецификата на директивите:
д) Сертифициращ орган
е) ЕО изследване на вида
4. Базирано на хармонизираните норми
ж) Ниво на измерена акустична мощност
и) Гарантирано ниво на акустична мощност
й) Широчина на косене
р) Лице, упълномощено да състави Техническата Документация:
о) Място и дата

ET (Algupärase kasutusjuhendi tõlge)

EÜ vastavusdeklaratsioon
(Masinadirektiiv 2006/42/EÜ, Lisa II, osa A)
1. Firma
2. Kinnitab omal vastutusel, et masin: murulõikur/äärelõikur, muruniitja
a) Tüüp / Põhimudel
b) Kuu aega / Tootmisaasta
c) Matrikkel
d) Mootor: aku
3. Vastab direktiivide nõuetele:
e) Kinnitav asutus
f) EÜ tüübihindamine
4. Viide ühtlustatud standarditele
g) Mõõdetud helivõimsuse tase
h) Garanteeritud helivõimsuse tase
i) Lõikelaius
n) Tehnilise Lehe autoriseeritud koostaja:
o) Koht ja Kuupäev

EXAMPLE

© by ST S.p.A.

IT • Il contenuto e le immagini del presente manuale d'uso sono stati realizzati per conto di ST S.p.A. e sono tutelati da diritto d'autore – E' vietata ogni riproduzione o alterazione anche parziale non autorizzata del documento.
BG • Съдържанието и изображенията в настоящото ръководство са извършени за ST S.p.A. и са защитени с авторски права – Забранява се всяко неоторизирано възпроизвеждане или промяна, дори и отчасти на документа.
BS • Sadržaj i slike iz ovog korisničkog priručnika napravljeni su isključivo za ST S.p.A. i zaštićeni su autorskim pravima – zabranjena je svaka neovlaštena reprodukcija ili izmjena dokumenta, djelomično ili u potpunosti.
CS • Obsah a obrázky v tomto návodu k použití byly zpracovány jménem společnosti ST S.p.A. a jsou chráněny autorským právem – Reprodukce či nepovolené pozměňování tohoto dokumentu, a to i částečné, je zakázáno.
DA • Indhold og illustrationer i denne vejledning er blevet skabt på vegne af ST S.p.A. og er beskyttet af ophavsret – Enhver gengivelse eller ændring, også delvis, af dokumentet uden autorisation hertil er forbudt.
DE • Inhalt und Bilder dieser Bedienungsanleitung wurden im Namen von ST S.p.A. erstellt und sind urheberrechtlich geschützt – Jede nicht genehmigte Vervielfältigung oder Veränderung, auch auszugsweise, dieses Dokuments ist verboten.
EL • Το περιεχόμενο και οι εικόνες στο παρόν εγχειρίδιο χρήσης δημιουργήθηκαν για λογαριασμό της εταιρείας ST S.p.A. και προστατεύονται από πνευματικά δικαιώματα – Απαγορεύεται οποιαδήποτε αναπαραγωγή ή τροποποίηση, έστω και μερική, του εγγράφου χωρίς έγκριση.
EN • The content and images in this User Manual were produced expressly for ST S.p.A. and are protected by copyright – any unauthorised reproduction or modification to the document, either partially or in full, is prohibited.
ES • El contenido y las imágenes del presente manual de uso han sido creados por ST S.p.A. y están protegidos por los derechos de autor – Se prohíbe toda reproducción o modificación, incluso parcial, no autorizada del documento.
ET • Käesoleva kasutusjuhendi sisu ja kujutised on toodetud konkreetselt ettevõttele ST S.p.A. ja neile rakendub autorikaitseseadus – dokumendi igasugune osaline või täielik ilma loata reprodutseerimine või muutmine on keelatud.
FI • Tämän käyttöoppaan sisältö ja kuvat on valmistettu ST S.p.A. -yhtiön toimesta ja niitä suojaa tekijänoikeuslaki. – Asiakirjan kaikenlainen kopioiminen tai muuttaminen, osittainkin, on kielletty ilman erityistä lupaa.
FR • Le contenu et les images du présent manuel d'utilisation ont été réalisés pour le compte de ST S.p.A. et sont protégés par un droit d'auteur - Toute reproduction ou modification non autorisée, même partielle, du document, est interdite.
HR • Sadržaj i slike u ovom priručniku za uporabu izrađeni su za tvrtku ST S.p.A. te su obuhvaćeni autorskim pravima – Zabranjuje se neovlašteno umnožavanje ili prilagodba, djelomična ili u cijelosti, ovog dokumenta.
HU • Ennek a használati útmutatónak a tartalma és a benne szereplő képek kizárólag a ST S.p.A. számára készültek és szerzői joggal védettek – tilos a dokumentum bármely részének vagy egészének engedély nélküli sokszorosítása és módosítása.
LT • Šio naudotojo vadovo turinys ir paveikslėliai skirti tik „ST S.p.A." ir yra saugomi autorių teisėmis – dokumentą atgaminti ar modifikuoti, visiškai arba iš dalies, yra draudžiama.
LV • Šīs lietotāja rokasgrāmatas saturs un attēli ir veidoti tikai ST S.p.A. un ir aizsargāti ar autortiesībām. Jebkāda dokumenta vai tā daļas prettiesiska kopēšana vai pārveide ir stingri aizliegta.
MK • Содржината и сликите во Упатството за корисникот се подготвени исклучиво за ST S.p.A. и се заштитени со авторски права – забрането е секое делумно или целосно неовластено репродуцирање или измена на документот.
NL • De inhoud en de afbeeldingen van deze gebruikshandleiding werden gerealiseerd voor rekening van ST S.p.A. en zijn beschermd door het auteursrecht – Elke niet-geautoriseerde reproductie of wijziging, ook gedeeltelijke, van het document is verboden.
NO • Innholdet og bildene i denne brukerveiledningen er utført på oppdrag fra ST S.p.A. og er beskyttet ved opphavsrett - Enhver gjengivelse eller endring, selv kun delvis, er forbudt.
PL • Treść oraz ilustracje zawarte w niniejszej instrukcji obsługi powstały na zlecenie spółki ST S.p.A. i są chronione prawami autorskimi – Zabrania się wszelkiego kopiowania bądź modyfikowania, także częściowego, niniejszego dokumentu bez uzyskania stosownej zgody.
PT • As imagens e os conteúdos contidos no presente Manual do Utilizador foram expressamente criados para uso exclusivo da ST S.p.A., encontrando-se protegidos por direitos de autor. Qualquer tipo de reprodução ou alteração, parcial ou integral, não autorizadas deste Manual estão expressamente proibidas.
RO • Conținutul și imaginile din manualul de utilizare de față au fost realizate în numele ST S.p.A. și sunt protejate de drepturi de autor – Este interzisă orice reproducere sau modificare chiar și parțială neautorizată a documentului.
RU • Тесты и изображения, содержащиеся в настоящем руководстве, были созданы в интересах ST S.p.A. и защищены авторскими правами – Любое несанкционированное воспроизведение или изменение документа запрещено.
SK • Obsah a obrázky v tomto návode na používanie boli spracované menom spoločnosti ST S.p.A. a sú chránené autorským právom – Reprodukcie či nepovolené pozmeňovanie tohto dokumentu, a to aj čiastočné, je zakázané.
SL • Vsebine in slike v tem uporabniškem priročniku so izdelane za podjetje ST S.p.A. in so zaščitene z avtorskimi pravicami – vsakršno nepooblaščeno razmnoževanje ali spreminjanje dokumenta, v celoti ali delno, je prepovedano.
SR • Sadržaj i slike ovog priručnika za upotrebu su napravljeni u ime ST S.p.A. i zaštićeni su autorskim pravima – Zabranjena je svaka potpuna ili delimična reprodukcija ili izmena dokumenta bez odobrenja.
SV • Innehållet och bilderna i denna användarhandbok har framställts för ST S.p.A. och skyddas av upphovsrätt – all form av reproduktion eller ändring, även partiell, som inte auktoriserats är förbjuden.
TR • Bu Kullanıcı Kılavuzundaki içerik ve resimler açıkça ST S.p.A. için üretilmiştir ve telif hakkı ile korunmaktadır – dokümanın izinsiz olarak tamamen ya da kısmen herhangi bir şekilde çoğaltılması ya da değiştirilmesi yasaktır.

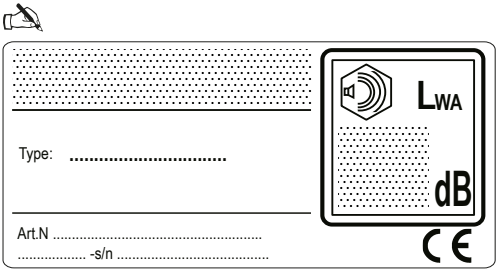

ST S.p.A.
Via del Lavoro, 6
31033 Castelfranco Veneto (TV) ITALY